HLB 860 P HLB 860P

70L | DualClean | Full Extension Telescopic Guide | HydroClean | Pyrolysis | SoftClose | SurroundTemp

DESCRIPTION	HLB 860P
LIFE STYLE	Maestro
COLOURS	
REFERENCE	REF. 41566020 EAN. 8421152148822

HLB 860 P

FEATURES

Multifunction SurroundTemp oven
12 cooking functions
Pyrolysis self-cleaning system and automatic HydroClean system
Touch control display with knob
Personal cooking assistant: 20 automatic programs
Chrome supports with 5 cooking levels
Full extension telescopic guides
Easy slide telescopic guides
Removable quadruple glazed door
SoftClose system
Children safety lock
Automatic disconnection safety system
Automatic quick preheating
Anti-tip deep tray and reinforced grid
Capacity (gross/net): 71 / 70 litres

HLB 860 P

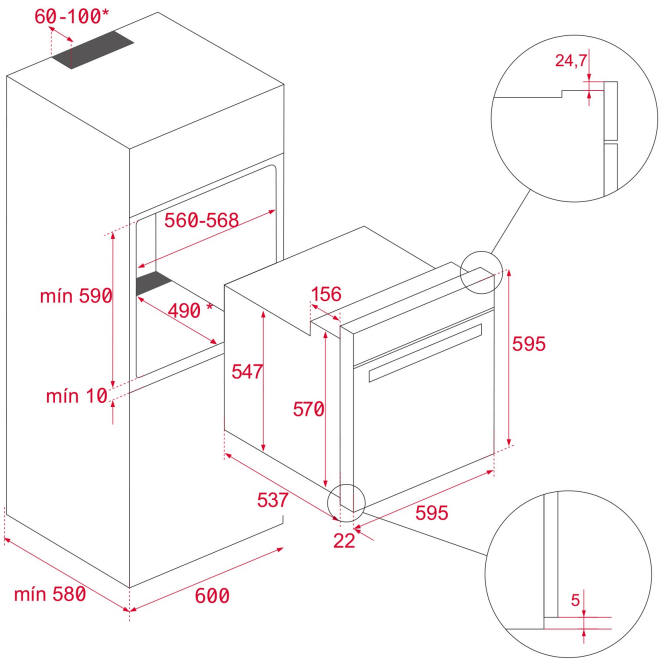

DIMENSIONS

Product height (mm): 595
Product width (mm): 595
Product depth (mm): 537+22
Product length (mm):
Net weight (Kg): 37

TECHNICAL DETAILS

FEATURES

Certificates: N / CE / CCA / CB
Number of cavities: 1
Type of inner light: Halogen
Inside light position: RIGHT TOP CORNER
Enamelled cavity: Yes
Min. Temperature Regulator (ºC): 30
Max. Temperature Regulator (ºC): 270
Function selector: ELECTRONIC
Number of cooking functions: 12
Number of recipes: 20
Top + Bottom function: Yes
Grill + Bottom function: Yes
Grill function: Yes
MaxiGrill function: Yes
Top + Bottom + Fan function: Yes
Bottom function: Yes
Bottom + TURBO (Pizza) function: Yes
Turbo function: Yes
ECO function: Yes
Ferment function: Yes
Automatic quick heating: Yes
Slow Cook: Yes

Knobs type: MMX FIX ROTATIVE
Ring illuminated: Yes
Removable chromed tray guides: Yes
Number of guide levels: 5
Full extension telescopic guides: Yes
Easy slide telescopic guides: Yes
SoftClose: Yes

ELECTRIC CONNECTION

Maximum Nominal Power (W): 3552
Frequency (Hz): 50/60
Power rate (V): 220-240
Cable Connection Length (cm): 150
Plug: Yes
Inside light Consumption (W): 25

ENERGY CONSUMPTION

Energy consumption per cycle in conventional mode (kWh): 0.87
Energy consumption per cycle in fan-forced convection mode (kWh): 0,68
Bottom Heating Element (W): 1050
Bottom Heating Element (W) (lower cavity): 1050
Grill (W): 1400
Maxi Grill (W): 2450
Traditional (W): 2450
Turbo (W): 2000
Multifunction Turbo (W): 25
Cooling Fan Motor (W): 30

SAFETY SYSTEMS

Automatic disconnection when opening the door: Yes
Panel blocking system: Yes
Children safety block option: Yes
Grill protection: Yes
Anti-tip tray system: Yes
Safety Thermostat: Yes

CLEANING SYSTEM

Crystal Clean Enamel (Slippery): Yes
Hydroclean PRO: Yes
Pyrolytic: Yes
DualClean: Yes

ACCESSORIES

Deep Tray (50 mm): 1
Steak tray: 0
Reinforced grid: 1

ENERGY EFFICIENCY

Energy Efficiency Class: A+
Energy Efficiency Index (EEI): 81

HLB 860 P
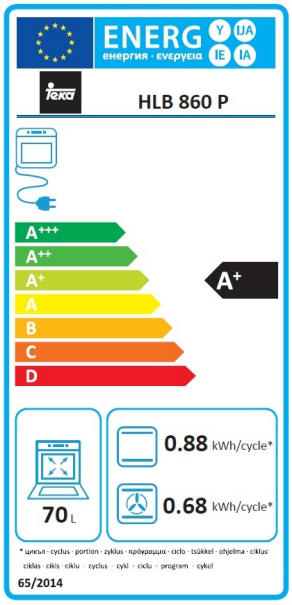
ENERGY LABEL