# **WMT 10710 WH** HomeCare Series Free Standing Washing Machine with 15 washing programs

Quick Cycle

| | |
|---|---|
| **DESCRIPTION** | HomeCare Series Free Standing Washing Machine with 15 washing programs |
| **LIFE STYLE** | Easy |
| **COLOURS** | |
| **REFERENCE** | REF. 113920006<br>EAN. 8434778016550 |

# WMT 10710 WH

**FEATURES**

HomeCare series
Free standing Washing Machine
Electronic control panel with display
Washing capacity: 7 kg
15 washing programs
Fast program: 15 minutes
Special programs: ECO mode, Wool care, Delicate, Anti-allergies mode
Special functions: Delay timer, Anti-allergies, Extra rinse
Maximum spinning speed: 1000 RPM
Automatic water regulation
Automatic door lock safety system
Child lock
Balance control system
SoftCare drum
Delay timer:1-24 hours
30 cm wide porthole door

# WMT 10710 WH

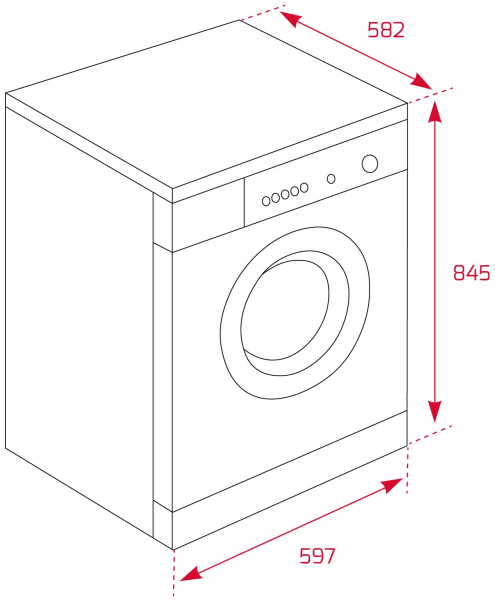


## DIMENSIONS

**Product height (mm):** 845
**Product width (mm):** 596
**Product depth (mm):** 533
**Product length (mm):**
**Net weight (Kg):** 55,2

## TECHNICAL DETAILS

| | |
|---|---|
| **PRODUCT SHEET** | **Type of installation:** Free standing<br>**Energy consumption (kWh/year):** 172<br>**Water consumption (litres/year):** 10337 |
| **POWER SUPPLY** | **Frequency (Hz):** 50<br>**Power rate (V):** 220-240<br>**Plug type:** EU<br>**Cable Connection Length (cm):** 160<br>**Maximum Nominal Power (W):** 2100<br>**Nominal power motor (W):** No<br>**Power of heating element (W):** 1850<br>**Water outlet hose length (m):** 1.695<br>**Water inlet hose length (m):** 1470 |
| **FEATURES** | **Stainless Steel Drum:** Yes<br>**Glass door diameter (cms):** 44<br>**Number of programs:** 15<br>**Number Of Washing Temperatures:** 0-20-30-40-50-60-70-80-90<br>**Control panel:** ELECTRONIC |

**Electronic washing management:** Yes
**Child lock:** Yes
**Auto lock door:** Yes
**Cancel spin cycle button:** Yes
**Removable work top:** Yes

## CONTROL INDICATOR LIGHTS

**Selected program indicator:** Yes
**Remaining time:** Yes

## SPECIAL FUNCTIONS

**Fast program:** Yes
**Fast program (minutes):** 15
**Economic program:** Yes
**Delicate fabrics:** Yes

## EQUIPMENT

**Adjustable Feet Back:** Yes
**Adjustable feet front:** Yes

# WMT 10710 WH
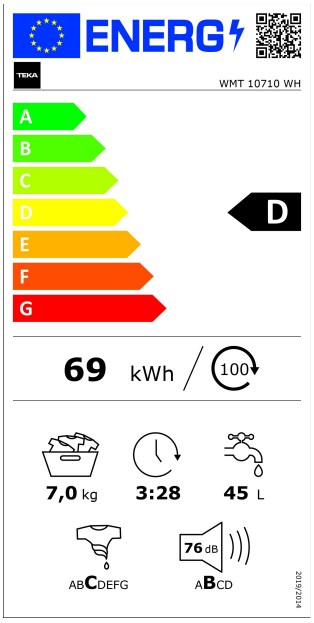
## ENERGY LABEL