WDT 71040 WH PremiumCare Series Free Standing Washer Dryer with 15 washing programs

Quick Cycle

10 Kg
Washing capacity: 10Kg

6 Kg
Washing capacity: 6Kg

DESCRIPTION	PremiumCare Series Free Standing Washer Dryer with 15 washing programs
LIFE STYLE	Maestro
COLOURS	
REFERENCE	REF. 113960004 EAN. 8434778016635

WDT 71040 WH

FEATURES

PremiumCare Series
Free standing Washer-Dryer
Electronic control panel with display
Washing capacity: 10 kg
Drying capacity: 6 kg
Washing programs: 11
Drying programs: 4
Fast program: 12 minutes
Special programs: ECO mode, Wool care, Delicate, AllergySafe, Quick Wash & Dry, Gentle Dry
Special functions: Delay timer, Speed wash, Extra rinse
Condenser heat pump
Maximum spinning speed: 1400 RPM
Automatic water regulation
Automatic door lock safety system
Child lock
Balance control system
SoftCare drum
Delay timer: 1-24 hours
33 cm wide porthole door

WDT 71040 WH

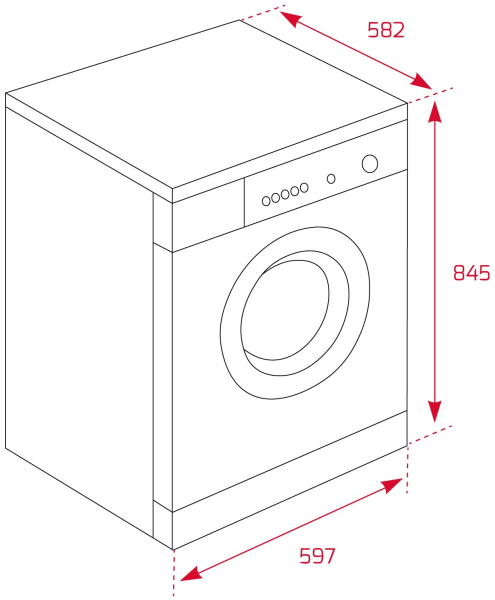

DIMENSIONS

Product height (mm): 845
Product width (mm): 597
Product depth (mm): 582
Product length (mm):
Net weight (Kg): 78

TECHNICAL DETAILS

PRODUCT SHEET

Type of installation: Free standing
Drying capacity (Kgs): 6
Energy consumption (kWh/year): 256
Water consumption (litres/year): 13000

POWER SUPPLY

Frequency (Hz): 50
Power rate (V): 220-240
Plug type: No
Cable Connection Length (cm): No
Maximum Nominal Power (W): 2200
Nominal power motor (W): 200
Power of heating element (W): 1850

FEATURES

Stainless Steel Drum: Yes
Glass door diameter (cms): 47
Number of programs: 11
Number Of Washing Temperatures: YES
Control panel: ELECTRONIC
Child lock: Yes

Auto lock door: Yes
Cancel spin cycle button: Yes

CONTROL INDICATOR LIGHTS

Selected program indicator: Yes
Remaining time: Yes
Drying: Yes
Dryer timer: Yes

SPECIAL FUNCTIONS

Fast program: Yes
Fast program (minutes): 12
Economic program: Yes
Intense program: Yes
Delayed Timer (h): YES
Delicate fabrics: Yes
Resistant: Yes

EQUIPMENT

Adjustable Feet Back: Yes
Adjustable feet front: Yes

WDT 71040 WH
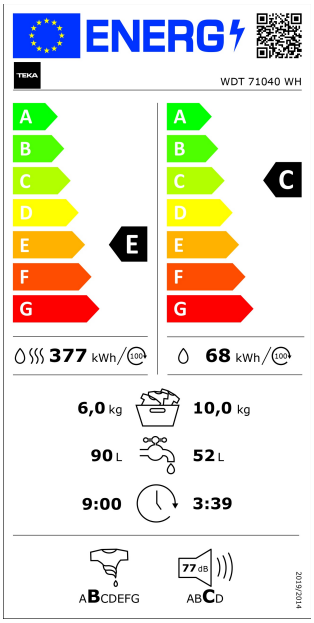
ENERGY LABEL