MAESTRO **HLB 860 P**

HLB 860P

70L DualClean Full Extension Telescopic Guide HydroClean Pyrolysis

SoftClose SurroundTemp

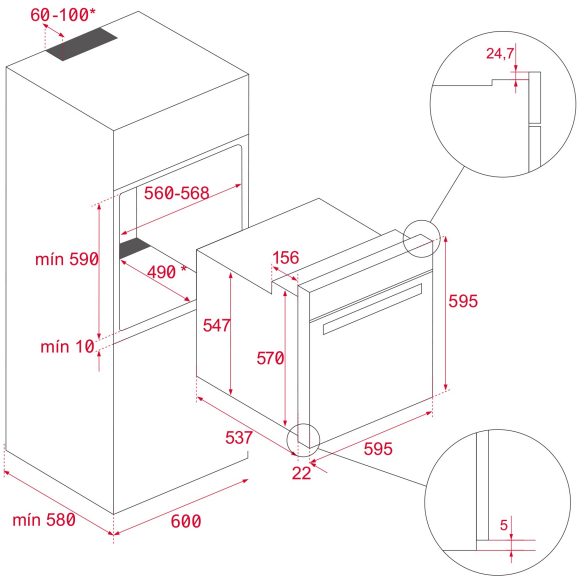

REFERENCE

REF: 41566020 EAN: 8421152148822

FEATURES

Multifunction SurroundTemp oven
12 cooking functions
Pyrolysis self-cleaning system and automatic HydroClean system
Touch control display with knob
Personal cooking assistant: 20 automatic programs
Chrome supports with 5 cooking levels
Full extension telescopic guides
Easy slide telescopic guides
Removable quadruple glazed door
SoftClose system
Children safety lock
Automatic disconnection safety system
Automatic quick preheating
Anti-tip deep tray and reinforced grid
Capacity (gross/net): 71 / 70 litres

DIMENSIONS

Product height (mm): 595
Product width (mm): 595
Product depth (mm): 537+22
Product length (mm):
Net weight (Kg): 37

TECHNICAL DETAILS

Energy Efficiency Class: A+
Power rate (V): 220-240
Frequency (Hz): 50/60
Maximum Nominal Power (W): 3552

COLOURS

41566020 Black Glass with StainlessSteel frame