MAESTRO **RMF 99250 SS**

4-Door No Frost refrigerator in 193 cm

Motor Inverter | On Holidays function | Eco Function | LED | LongLife No Frost

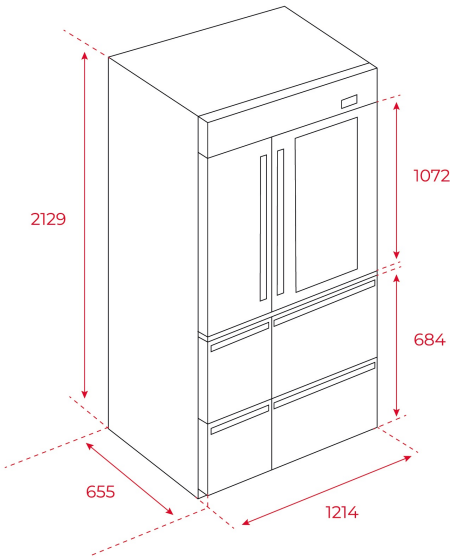

REFERENCE

REF: 113430007 EAN: 8434778002423

FEATURES

Free Standing bottom freezer refrigerator
LongLife No Frost with 2 independent circuits
Inverter motor
Outer control display
Electronic adjustable thermostat
Safety glass shelves
Automatic ice maker
On holidays function
Fast freezing and fast cooling function
ECO Function
LED Illumination
Climate class: SN/T
Total capacity (gross/net): 820 / 713 litres
Bottle rack included

DIMENSIONS

Product height (mm): 2120
Product width (mm): 1210
Product depth (mm): 710
Product length (mm):
Net weight (Kg): 328

TECHNICAL DETAILS

Energy efficiency class (UE 2019/2016): -
Climate Class: SN/T
Energy Consumption (Kw/day): -
Annual Consumption (kWh/year): -
Freezing Capacity: 13
Noise Level (dBA): 48
Power rate (V): 220-240
Frequency (Hz): 50

COLOURS

113430007 Stainless Steel