DFI 46950
Fully integrated dishwasher with DualCare program and Extra Drying function

Beam On Floor | Eco Function | Third Cutlery Tray | Extra Dry function | Detergent detector system

AquaLogic

REFERENCE

REF: 114270001 EAN: 8434778013535

FEATURES

Built-in Dishwasher
Electronic control panel with display
Capacity: 15 plate settings
Washing programs: 9
Washing temperatures: 35°, 40°, 45°, 50°, 65°, 70°C
Motor Inverter
SmartSensor measure the level of dirtiness
MultiCleaner Sensor
FlexiSet 4 lower basket
Fast programs: 30 minutes
Special programs: GlassCare, DualCare, AutoClean, AutoProgram, Intensive program, ECO program, 1-Hour, PreWash
Special functions: Half load, Express, PowerWash, ExtraDry
AquaStop and AquaSafe safety systems
Low salt and rinse indicator
Third sprayer
Beam on floor
Push-up adjustable upper basket
Delay timer: 1-24 hours
Noise level: 46 dBA
Adjustable back feet from front
Sliding Detergent drawer
SlidingDoor installation system
Column installation

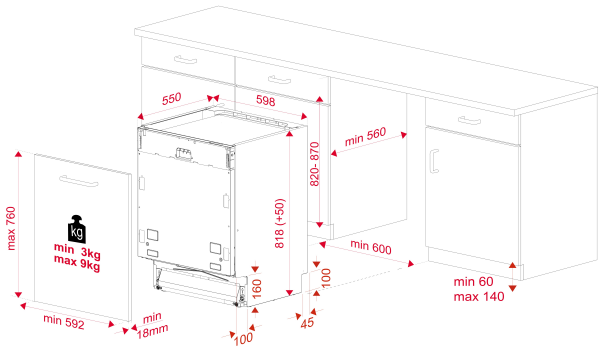

DIMENSIONS

Product height (mm): 818
Product width (mm): 598
Product depth (mm): 550
Product length (mm):
Net weight (Kg): 38,4

TECHNICAL DETAILS

Energy Efficiency Class: A++
Energy Consumption (Kw/day): -
Water consumption (litres/year): 2660
Noise Level (dBA): 46
Power rate (V): 220-240
Frequency (Hz): 50

COLOURS