EX 70.1 5G AI AL DR CI

Stainless steel gas hob with frontal control knobs of butane and natural gas

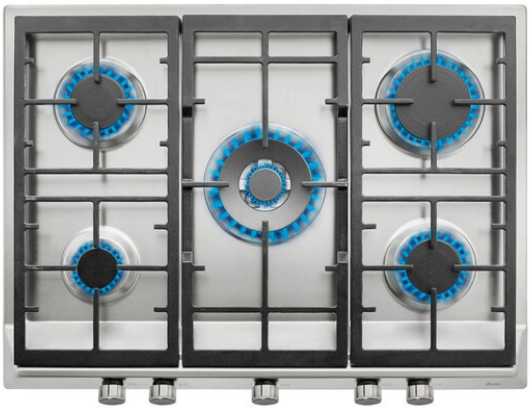

Auto ignition Autolock

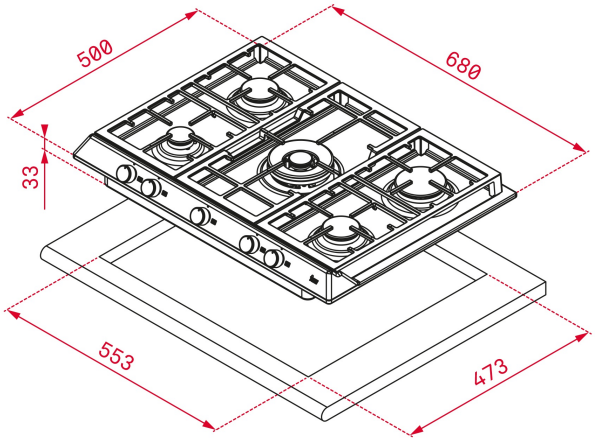

REFERENCE

REF: 112610043 EAN: 8434778019537

FEATURES

Gas hob
Frontal control knobs
5 cooking zones
1 double ring burner, 4.00 kW
1 fast burner, 2.8 kW
2 semi fast burners, 1.7 kW
1 auxiliary burner, 1 kW
Stainless steel surface
Auto ignition
Auto-lock safety system
Cast iron grids
Maximum nominal power 11.300 W
Optional: Wok support

DIMENSIONS

Product height (mm): 84
Product width (mm): 680
Product depth (mm): 500
Product length (mm):
Net weight (Kg): 11,6

TECHNICAL DETAILS

Power rate (V): 220-240
Frequency (Hz): 50/60
Maximum Nominal Power (W): -

COLOURS

112610043 Stainless steel

ENERGY EFFICIENCY

Power consumption in standby mode (W): -
Time to reach standby mode (min): -