TOTAL **FOT 995**

Single lever Kitchen Tap with aerator integrated in the spout

Saving Water

Anti-Scale Aerator

Swivel Spout

Easy_Quick

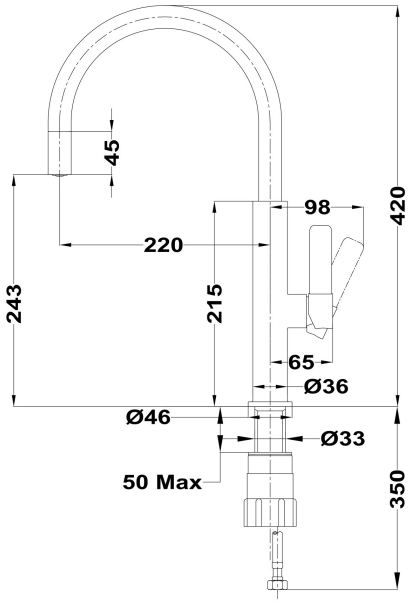


## REFERENCE

REF: 116030046 EAN: 8434778012828

## FEATURES

High spout kitchen tap
Swivel spout
Anti-scale aerator
Cartridge with ceramic discs of high resistance
Highly precise temperature control
Greater handling sensitivity with smoother movements
Easy-Quick fixation system
3/8" - 1/2" flexible inlet pipes

## DIMENSIONS

**Product height (mm):**
**Product width (mm):**
**Product depth (mm):**
**Product length (mm):**
**Net weight (Kg):** 0,95

## COLOURS

| | |
|---|---|
| 116030046 | Stone Grey |
| 116030022 | London Brick Brown |
| 116030022 | Steam Grey |
| 116030022 | Chrome Titanium |
| 116030022 | Chrome Brass |
| 116030022 | Black Chrome |
| 116030022 | Chrome White |
| 116030022 | Chrome |