Stone manual wst kit 1 bowl

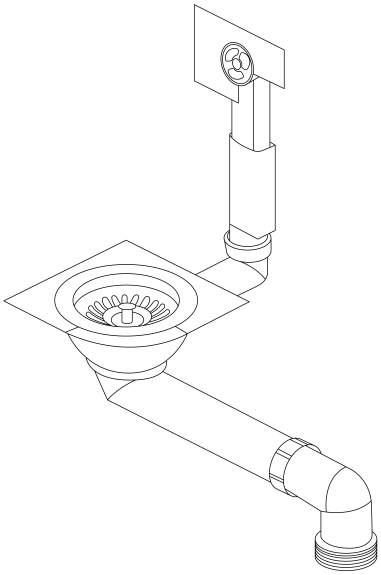

REFERENCE

REF: 115890000 EAN: 8434778006643

FEATURES

Kit bowl

DIMENSIONS

Product height (mm):
Product width (mm):
Product depth (mm):
Product length (mm):
Net weight (Kg):

COLOURS