iOven P A+ Pyrolytic Oven with 50 recipes and SteamBox

70L | DualClean | Full Extension Telescopic Guide | MeatProbe | HydroClean | Pyrolysis | SoftClose | SurroundTemp

The SteamBox Included

DESCRIPTION	A+ Pyrolytic Oven with 50 recipes and SteamBox
LIFE STYLE	Maestro
COLOURS	
REFERENCE	REF. 111000000 EAN. 8434778000146

iOven P

FEATURES

Multifunction SurroundTemp oven
18 cooking functions
Pyrolysis self-cleaning system and automatic HydroClean system
Full touch control display
Personal cooking assistant: 50 automatic programs
Chrome supports with 5 cooking levels
Full extension telescopic guides
Easy slide telescopic guides
Removable quadruple glazed door
SoftClose system
Children safety lock
Automatic disconnection safety system
Automatic quick preheating
Anti-tip deep tray
The SteamBox included
Capacity (gross/net): 71 / 70 litres

iOven P

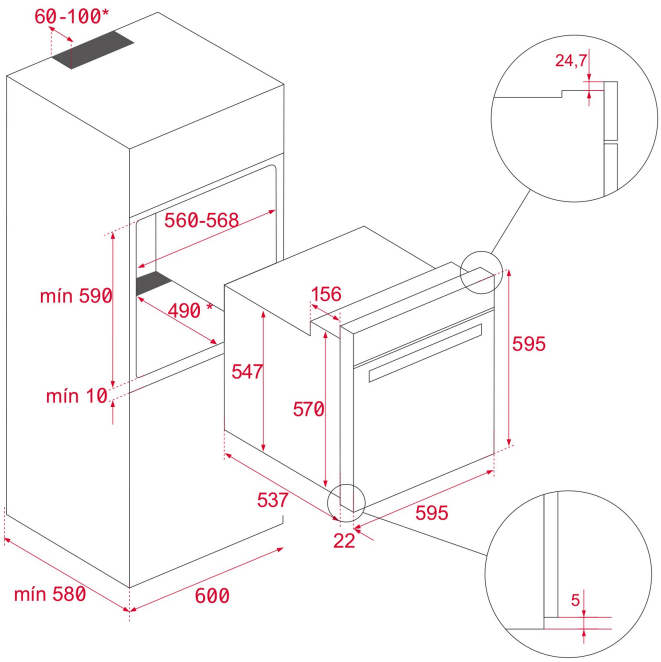

DIMENSIONS

Product height (mm): 595
Product width (mm): 595
Product depth (mm): 537+22
Product length (mm):
Net weight (Kg): 40

TECHNICAL DETAILS

FEATURES

Certificates: N / CE / CCA / CB/EAC/GMARK/SASO
Number of cavities: 1
Type of inner light: Halogen
Inside light position: RIGHT TOP CORNER
Enamelled cavity: Yes
Min. Temperature Regulator (ºC): 30
Max. Temperature Regulator (ºC): 270
Function selector: ELECTRONIC
Number of cooking functions: 18
Number of recipes: 50
Top + Bottom function: Yes
Grill + Bottom function: Yes
Top function: Yes
Grill function: Yes
MaxiGrill function: Yes
Top + Bottom + Fan function: Yes
Grill + Fan function: Yes
MaxiGrill + Fan function: Yes
Bottom function: Yes
Bottom + TURBO (Pizza) function: Yes
Turbo function: Yes
ECO function: Yes

Bake bread function: Yes
Ferment function: Yes
Keeping warm: Yes
Automatic quick heating: Yes
Slow Cook: Yes
Removable chromed tray guides: Yes
Number of guide levels: 5
Full extension telescopic guides: Yes
Easy slide telescopic guides: Yes
Drop-down grill: Yes
SoftClose: Yes

ELECTRIC CONNECTION

Maximum Nominal Power (W): 3552
Frequency (Hz): 50/60
Power rate (V): 220-240
Cable Connection Length (cm): 150
Plug: Yes
Inside light Consumption (W): 25

ENERGY CONSUMPTION

Energy consumption per cycle in conventional mode (kWh): 0.95
Energy consumption per cycle in fan-forced convection mode (kWh): 0,68
Bottom Heating Element (W): 1050
Grill (W): 1400
Maxi Grill (W): 2450
Traditional (W): 2450
Turbo (W): 2000
Multifunction Turbo (W): 25
Cooling Fan Motor (W): 30

SAFETY SYSTEMS

Automatic disconnection when opening the door: Yes
Panel blocking system: Yes
Children safety block option: Yes
Grill protection: Yes
Anti-tip tray system: Yes
Safety Thermostat: Yes

CLEANING SYSTEM

Crystal Clean Enamel (Slippery): Yes
Hydroclean PRO: Yes
Pyrolytic: Yes
DualClean: Yes

ACCESSORIES

Baking Tray: 1
Deep Tray (50 mm): 1
The SteamBox: 1
Reinforced grid: 2
Meat Probe: 1

ENERGY EFFICIENCY

Energy Efficiency Class: A+
Energy Efficiency Index (EEI): 81

iOven P
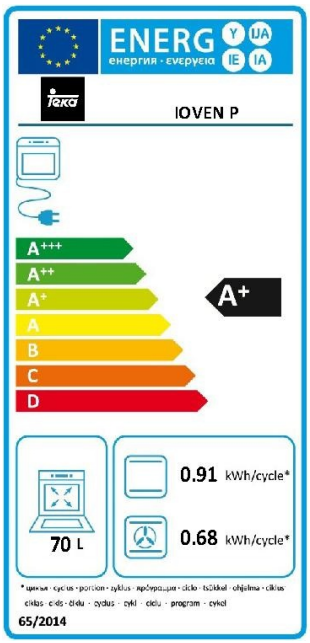
ENERGY LABEL