SteakMaster Multifunction Pyrolytic oven with special Grill and Cast iron grid for Steaks

DualClean | Plus Extension Telescopic Guide | HydroClean | Pyrolysis | SoftClose | SurroundTemp

DESCRIPTION	Multifunction Pyrolytic oven with special Grill and Cast iron grid for Steaks
LIFE STYLE	Maestro
COLOURS	
REFERENCE	REF. 111000036 EAN. 8434778012576

SteakMaster

FEATURES

SteakMaster oven
Urban Colors Edition
Multifunction SurroundTemp oven
13 cooking functions
Powerful SteakGrill (700ºC)
Pyrolysis self-cleaning system and automatic HydroClean system
Touch control display with knobs
Electronic timer (Delay/Start function)
20 automatic programs for meat
Chrome supports with 5 cooking levels
Plus Extension Telescopic guides
Removable quadruple glazed door
SoftClose system
Automatic disconnection security system
Children safety lock
Automatic quick preheating
Anti-tip deep tray and reinforced grid
Special cast iron grid for steaks included
Capacity (gross/net): 71 / 63 litres

TEKA

SteakMaster

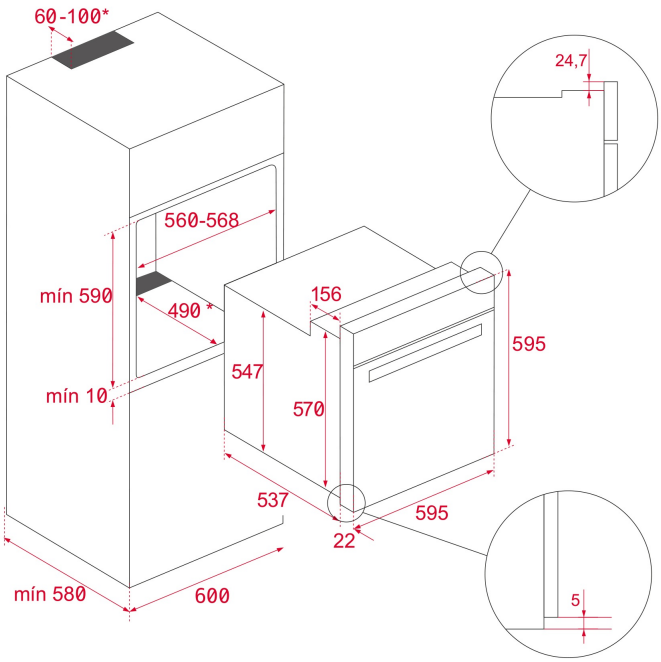

DIMENSIONS

Product height (mm): 595
Product width (mm): 595
Product depth (mm): 537+22
Product length (mm):
Net weight (Kg): 45,8

TECHNICAL DETAILS

FEATURES

Certificates: N / CE / CCA / CB / EAC
Number of cavities: 1
Type of inner light: Halogen
Inside light position: Left-Right TOP CORNER
Enamelled cavity: Yes
Min. Temperature Regulator (ºC): 30
Max. Temperature Regulator (ºC): 250
Function selector: ELECTRONIC
Number of cooking functions: 13
Number of recipes: 20
Top + Bottom function: Yes
Grill + Bottom function: Yes
Grill function: Yes
MaxiGrill function: Yes
Top + Bottom + Fan function: Yes
Bottom function: Yes
Bottom + TURBO (Pizza) function: Yes
Turbo function: Yes
ECO function: Yes
Ferment function: Yes
Automatic quick heating: Yes
Slow Cook: Yes

Knobs type: MMX FIX ROTATIVE SS
Ring illuminated: Yes
Removable chromed tray guides: Yes
Number of guide levels: 5
Easy slide telescopic guides: Yes
SoftClose: Yes

ELECTRIC CONNECTION

Maximum Nominal Power (W): 3518
Frequency (Hz): 50/60
Power rate (V): 220-240
Cable Connection Length (cm): 150
Plug: Yes
Inside light Consumption (W): 2x25

ENERGY CONSUMPTION

Energy consumption per cycle in conventional mode (kWh): 1.01
Energy consumption per cycle in fan-forced convection mode (kWh): 0,77
Bottom Heating Element (W): 1050
Grill (W): 2400
Maxi Grill (W): 3450
Traditional (W): 2100
Turbo (W): 2000
Multifunction Turbo (W): 25
Cooling Fan Motor (W): 30

SAFETY SYSTEMS

Automatic disconnection when opening the door: Yes
Panel blocking system: Yes
Children safety block option: Yes
Grill protection: Yes
Anti-tip tray system: Yes
Safety Thermostat: Yes

CLEANING SYSTEM

Crystal Clean Enamel (Slippery): Yes
Hydroclean PRO: Yes
Pyrolytic: Yes
DualClean: Yes

ACCESSORIES

Deep Tray (50 mm): 1
Cast iron tray: 1
Reinforced grid: 1

ENERGY EFFICIENCY

Energy Efficiency Class: A
Energy Efficiency Index (EEI): 95

SteakMaster
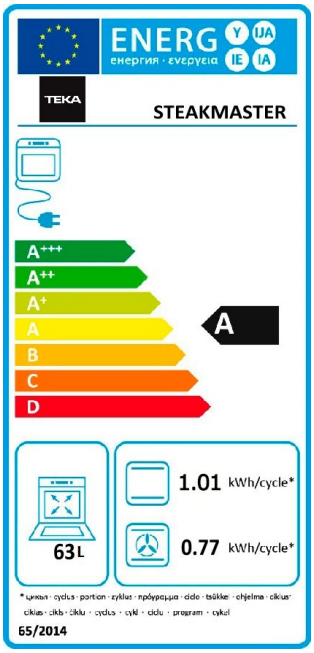
ENERGY LABEL