NC 680
Glass wing wall-mounted extractor hood NC 680

LED Stop Delay Timer

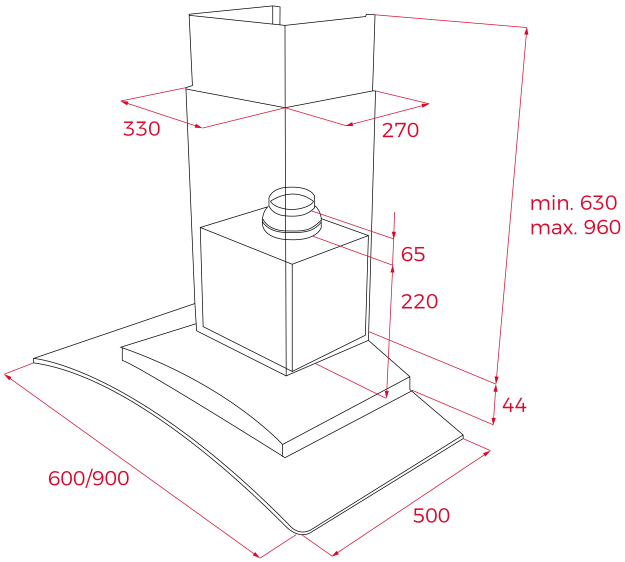

REFERENCE

REF: 40455336 EAN: 8421152144060

FEATURES

Ultraslim glass wing decorative hood
Backlit electronic panel with white display
Operating pilot light
3 speeds + 1 intensive
Exhaust capacities:
Free Outlet, m³/h: 825
Qboost, m3/h: 637
Max., m3/h: 402, Min., m³/h: 298
Noise (LwA) Boost Speed, dB: 70
Noise (LwA) Max Speed, dB: 60
Noise (LwA) Min Speed, dB: 52
2 LED lamps
1 stainless steel – aluminium filter
Reinforced glass upper structure
Stop delay timer
Filter saturation indicator

DIMENSIONS

Product height (mm): 674-1004
Product width (mm): 600
Product depth (mm): 500
Product length (mm):
Net weight (Kg): 12,9

TECHNICAL DETAILS

Energy Efficiency Class: #N/D
Noise (LwA) Min Speed (dB): #N/D
Noise (LwA) Max Speed (dB): #N/D
Noise (LwA) Boost Speed (dB): #N/D
Ø Outlet (mm): 150

COLOURS