EX 60.1 4G AI AL CI

60 cm gas hob with double ring burner

Auto ignition

Autolock

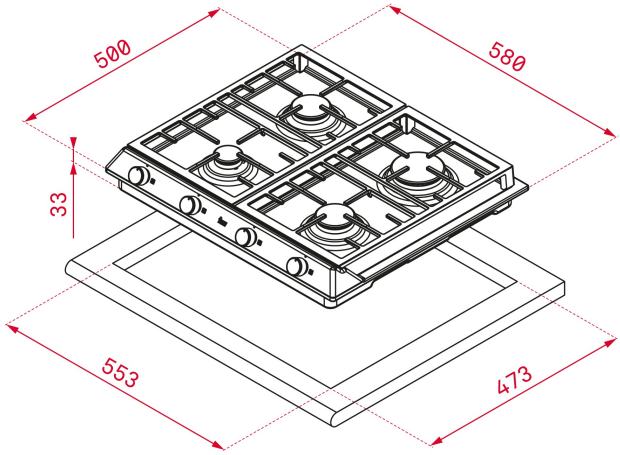

REFERENCE

REF: 40212004 EAN: 8421152152379

FEATURES

60 cm gas hob
Double ring burner
Cast iron grids
Frontal control knobs
Auto ignition
Auto-lock safety system
4 cooking zones
1 fast burner (2.8 kW)
2 semi fast burner (1.7 kW)
1 fast burner (1 kW)
Gas typology: LPG (butane/propane)
Nozzles to natural gas

DIMENSIONS

Product height (mm): 84
Product width (mm): 580
Product depth (mm): 500
Product length (mm):
Net weight (Kg): 9,4

TECHNICAL DETAILS

Power rate (V): 220-240
Frequency (Hz): 50/60
Maximum Nominal Power (W): -

COLOURS

40212004 Stainless Steel

ENERGY EFFICIENCY

Power consumption in standby mode (W): -
Time to reach standby mode (min): -