MAESTRO **GFL 77650**

Filter group with Rim extraction in 70cm

LED | Perimeter extraction | Stop Delay Timer

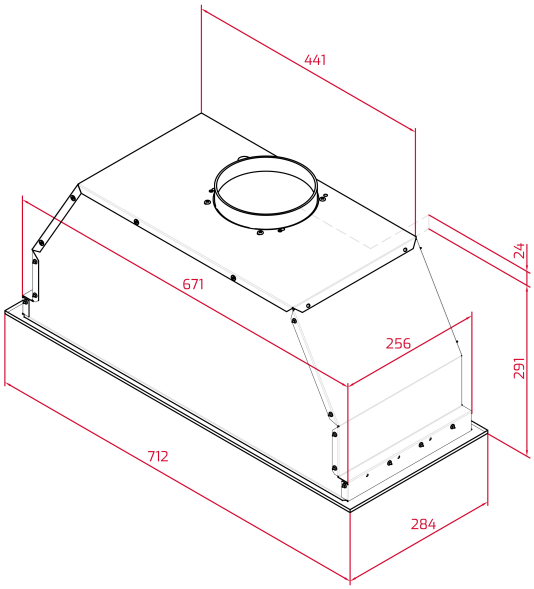

REFERENCE

REF: 113100003 EAN: 8434778016376

FEATURES

Built-in filter group
Rim extraction
Electronic control
3 speeds + 1 intensive
Free Outlet exhaust capacity (m3/h): 800
Max speed exhaust capacity (m3/h): 559
Min speed exhaust capacity (m3/h): 285
Intensive speed exhaust capacity (m3/h): 646
Intensive speed sound level (dBA): 71
Max speed sound level (dBA): 66
Min speed sound level (dBA): 52
2 LED Lamps
1 Aluminium filter
Stop Delay Time
Operating pilot light
Anti-return valve included
Outlet reduction included
Optional Charcoal Filter: C01RTK

DIMENSIONS

Product height (mm): 316
Product width (mm): 712
Product depth (mm): 284
Product length (mm):
Net weight (Kg): 9,9

TECHNICAL DETAILS

Energy Efficiency Class: A
Noise (LwA) Min Speed (dB): 52
Noise (LwA) Max Speed (dB): 66
Noise (LwA) Boost Speed (dB): 71
Ø Outlet (mm): 150

COLOURS

113100003 Stainless Steel