MAESTRO **FO 999**

Professional Kitchen Tap Mixer with flexible spring

REFERENCE

REF: 629990200 EAN: 8421152131565

FEATURES

Professional kitchen tap
Swivel and flexible spout
Anti-scale aerator
Pull-down shower 1 function: aerated spray
High resistant flexible spring
Stainless steel flexible hose
Cartridge with ceramic discs of high resistance
Highly precise temperature control
Greater handling sensitivity with smoother movements
3/8" flexible inlet pipes

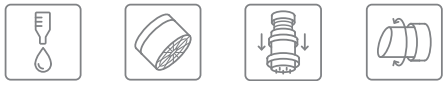

Saving Water | Anti-Scale Aerator | Pull Down Shower | Swivel Spout

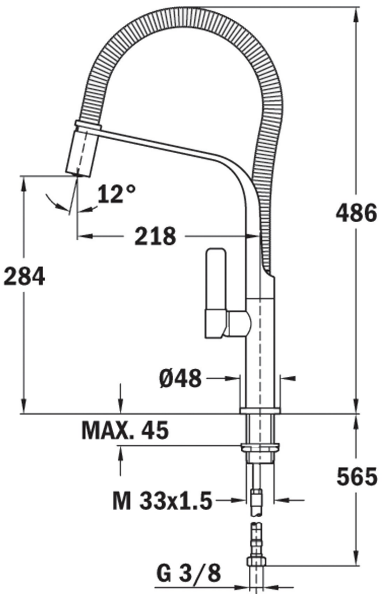

DIMENSIONS

Product height (mm): 486
Product width (mm):
Product depth (mm):
Product length (mm):
Net weight (Kg): 2,45

COLOURS

629990200 Chrome