DOS 90.1 ATS Wall-mounted rustic-style extractor hood in 90cm

LED

DESCRIPTION	Wall-mounted rustic-style extractor hood in 90cm
LIFE STYLE	Total
COLOURS	
REFERENCE	REF. 113010006 EAN. 8434778010107

DOS 90.1 ATS

FEATURES

Country Style Edition
Decorative pyramidal hood
Electronic control
3 speeds
Free Outlet exhaust capacity (m3/h): 650
Max speed exhaust capacity (m3/h): 603
Min speed exhaust capacity (m3/h): 256
Max speed sound level (dBA): 66
Min speed sound level (dBA): 51
2 LED lamps
2 Aluminum filters
Operating pilot light
Anti-return valve included
Outlet reduction included
Optional recirculation kit with tube cover installation: SET 4/D
Optional Charcoal Filter: D5C

DOS 90.1 ATS

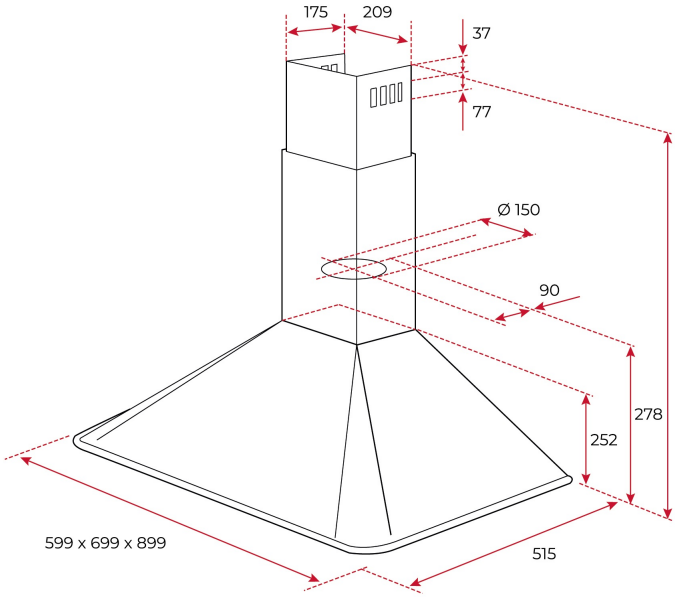

DIMENSIONS

Product height (mm): 733-1148
Product width (mm): 600/900
Product depth (mm): 500
Product length (mm):
Net weight (Kg): 13,2

TECHNICAL DETAILS

FEATURES

Certificates: CE; CB; Rohs
Ø Outlet (mm): 150
Type of inner light: LED
Inside light Consumption (W): 3
Plug type: European Plug
Power rate (V): 220-230
Frequency (Hz): 50-60
Total hood power (W): 290
Number of motors: 1
Motor power (W): 250
Air flow (Qmin) m3/h: 256
Air flow (Qmax): 603

ACCESSORIES

Anti Return valve: Yes
Outlet reduction: Yes
Optional Charcoal Filter: D5C
Conventional recirculation kit (opt) - w/tube cover: SET 4/D

MODELS

Number of filters: 2

Filter description: Aluminum
Control panel: Electronic Control
Number of speeds: 3