ML 825 TFL 25L Built-in Microwave + Grill with Full Touch Control

Defrost By Time

Defrost By Weight

Direct Access Menu

Electronic Door Opening

DESCRIPTION	25L Built-in Microwave + Grill with Full Touch Control
LIFE STYLE	Maestro
COLOURS	
REFERENCE	REF. 40590640 EAN. 8421152149188

ML 825 TFL

FEATURES

Built-in Microwave + Grill
3 cooking functions
8 direct access menus
2 memories
5 power levels, 1450 W
Grill power: 1000 W
Defrost by time and weight
Touch control display with minute minder
Double glazed door with right opening
Electronic door opening
Children safety lock
Automatic disconnection when open door
Incandescent inner light
Quick start
Capacity (gross/net): 25 / 23.6 litres
Stainless steel cavity

ML 825 TFL

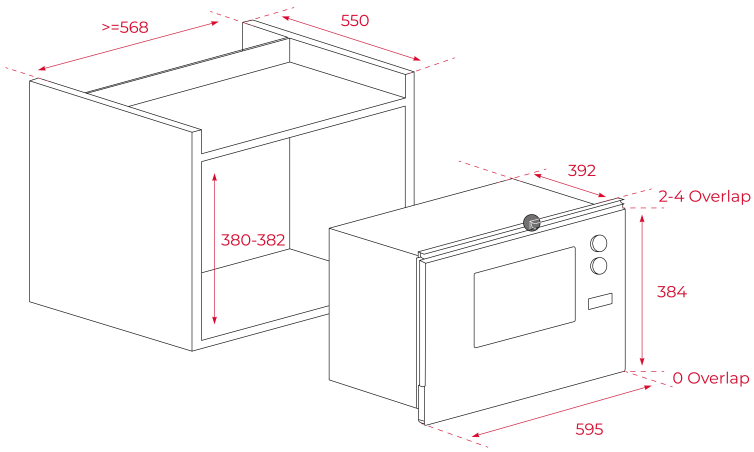

DIMENSIONS

Product height (mm): 384
Product width (mm): 595
Product depth (mm): 392
Product length (mm):
Net weight (Kg): 17,6

TECHNICAL DETAILS

FEATURES

Certificates: CE; CB;
Number of cooking functions: 3
Number of memories: 2
Grill function: Yes
Minute Minder: Yes
Number of guide levels (lower cavity): 0
Microwave function: Yes
Microwave + Grill function: Yes
Number of power levels: 5
Seconds Quick Start: Yes

ELECTRIC CONNECTION

Maximum Nominal Power (W): 1450
Frequency (Hz): 50
Power rate (V): 230
Cable Connection Length (cm): 110
Inside light Consumption (W): 25

ENERGY CONSUMPTION

Grill (W): 1000
Turbo (W): 0

SAFETY SYSTEMS	**Automatic disconnection when opening the door:** Yes **Children safety block option:** Yes **Safety Thermostat:** Yes
ACCESSORIES	**Glass Tray:** 1 **Crunch plate:** 0