MTP 978 Kitchen Tap mixer with pullout shower

Anti-Scale Aerator

Pull Out Shower

Resistance

Swivel Spout

DESCRIPTION	Kitchen Tap mixer with pullout shower
LIFE STYLE	Maestro
COLOURS	
REFERENCE	REF. 46978020S EAN. 8421152090855

MTP 978

FEATURES

Low spout pull-out kitchen tap
Swivel spout
Anti-scale aerator
Pull-out 2 functions: normal & shower spray
Extra resistant flexible hose
40 mm cartridge
Cartridge with ceramic discs of high resistance
Highly precise temperature control
Greater handling sensitivity with smoother movements
3/8" flexible inlet pipes

MTP 978

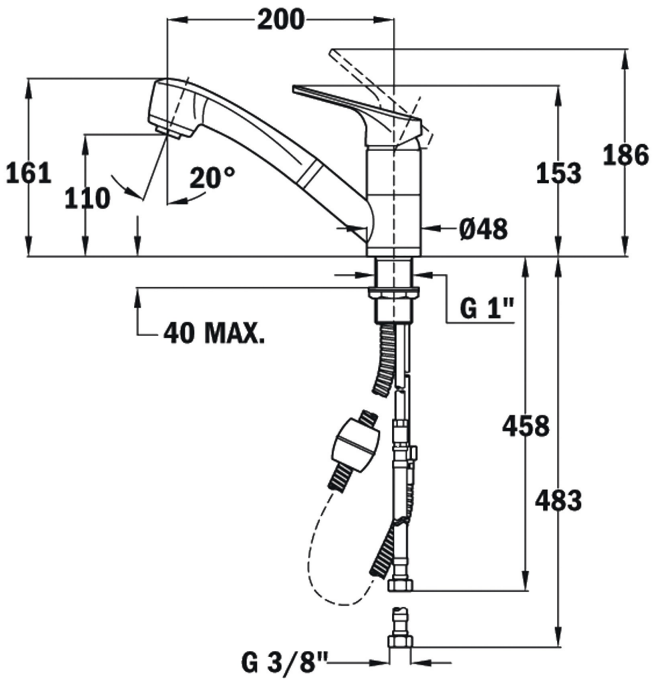

DIMENSIONS

Product height (mm): 161
Product width (mm):
Product depth (mm):
Product length (mm):
Net weight (Kg): 2,12

TECHNICAL DETAILS

MODELS	
	Type of installation: Free standing