FO 999 Professional Kitchen Tap Mixer with flexible spring

Saving Water

Anti-Scale Aerator

Pull Down Shower

Swivel Spout

DESCRIPTION	Professional Kitchen Tap Mixer with flexible spring
LIFE STYLE	Maestro
COLOURS	
REFERENCE	REF. 629990200 EAN. 8421152131565

FO 999

FEATURES

Professional kitchen tap
Swivel and flexible spout
Anti-scale aerator
Pull-down shower 1 function: aerated spray
High resistant flexible spring
Stainless steel flexible hose
Cartridge with ceramic discs of high resistance
Highly precise temperature control
Greater handling sensitivity with smoother movements
3/8" flexible inlet pipes

FO 999

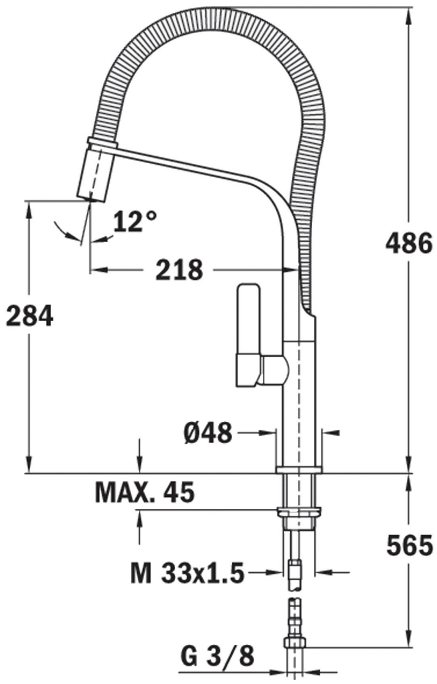

DIMENSIONS

Product height (mm): 486
Product width (mm):
Product depth (mm):
Product length (mm):
Net weight (Kg): 2,45

TECHNICAL DETAILS

MODELS	**Type of installation:** Free standing