Centroval 1B Inset stainless steel sink

Antibacterial

Lifetime warranty

DESCRIPTION	Inset stainless steel sink
LIFE STYLE	Easy
COLOURS	
REFERENCE	REF. 10111004 EAN. 8421152040041

Centroval 1B

FEATURES

Sphera Series
Stainless steel sink
One bowl
Inset installation
3½" manual basket waste
180 mm deep bowl
45 cm base unit

Centroval 1B

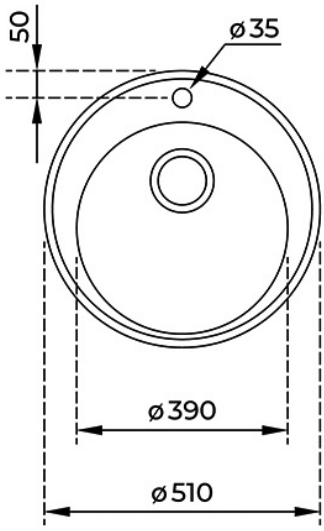

DIMENSIONS

Product height (mm):
Product width (mm): Ø510
Product depth (mm): 180
Product length (mm): Ø510
Net weight (Kg): 2,1

TECHNICAL DETAILS

MAIN BOWL	**Main Bowl Length (mm):** Ø390 **Main Bowl Width (mm):** Ø390 **Main Bowl Depth (mm):** 180
OTHER FEATURES	**Material:** Stainless Steel **Type of installation:** Inset **Valve hole type:** 3½" **Overflow hole:** Round **Sink Bowl / Top thickness (mm):** 0,8
OTHERS	**Base unit (cm):** 45
SINK LAY OUT	**Number of bowls:** 1 **Number of drainers:** 0
ACCESSORIES	**Soundproof:** Yes **Installation clips:** Yes