Classic 2½B Inset stainless steel sink

Antibacterial

Lifetime warranty

DESCRIPTION	Inset stainless steel sink
LIFE STYLE	Total
COLOURS	
REFERENCE	REF. 10119080 EAN. 8421152031407

Classic 2½B

FEATURES	Classic Series Stainless steel sink Two bowls and one auxiliary bowl Inset installation 3½" manual basket waste and siphon 190 and 135 mm deep bowls 100 cm base unit

Classic 2½B

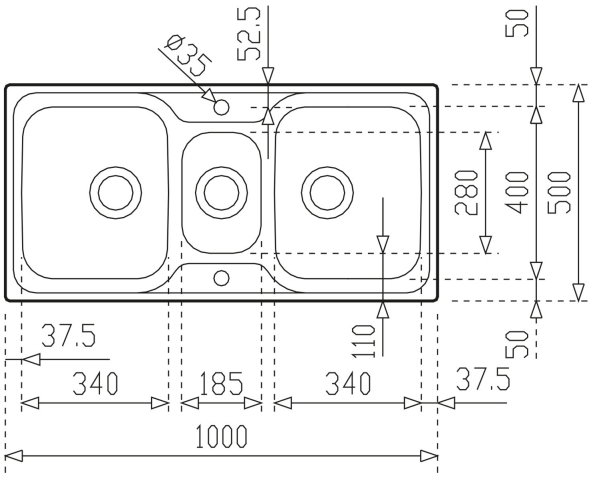

DIMENSIONS

Product height (mm):
Product width (mm): 500
Product depth (mm): 190
Product length (mm): 1000
Net weight (Kg): 6,22

TECHNICAL DETAILS

MAIN BOWL	**Main Bowl Length (mm):** 340 **Main Bowl Width (mm):** 400 **Main Bowl Depth (mm):** 190
OTHER FEATURES	**Material:** Stainless Steel **Type of installation:** Inset **Valve hole type:** 3½" **Overflow hole:** Round **Sink Bowl / Top thickness (mm):** 0,8 / 0,8 / 0,8 / 0,8
OTHERS	**Auxiliary Bowl Length x Width x Depth (mm):** 180 x 270 x 135 **Base unit (cm):** 100
SECONDARY BOWL	**Secondary Bowl Length (mm):** 340 **Secondary Bowl Width (mm):** 400 **Secondary Bowl Depth (mm):** 190

SINK LAY OUT	**Number of bowls:** 2 **Number of drainers:** 0 **Drainer position:** Reversible
ACCESSORIES	**Soundproof:** Yes **Installation clips:** Yes **Siphon:** Yes