IN 938 Single lever Kitchen Tap with pull-out shower

Anti-Scale Aerator | Pull Out Shower | Resistance | Swivel Spout | Easy_Quick

DESCRIPTION	Single lever Kitchen Tap with pull-out shower
LIFE STYLE	Maestro
COLOURS	
REFERENCE	REF. 539381200 EAN. 8413509220060

IN 938

FEATURES

High spout pull-out kitchen tap
Swivel spout
Anti-scale aerator
Pull-out 1 function: normal
Extra resistant flexible hose
35 mm cartridge
Cartridge with ceramic discs of high resistance
Highly precise temperature control
Greater handling sensitivity with smoother movements
Easy-Quick fixation system
3/8" certified flexible inlet pipes

TEKA

IN 938

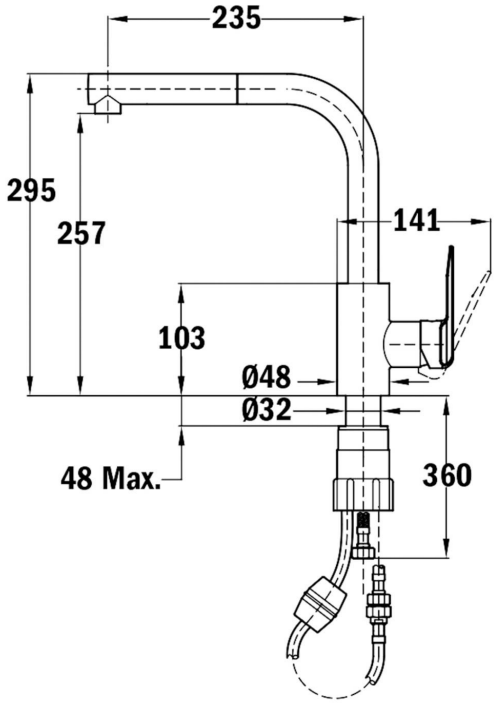

DIMENSIONS

Product height (mm): 296
Product width (mm):
Product depth (mm):
Product length (mm):
Net weight (Kg): 1,65

TECHNICAL DETAILS

MODELS	**Type of installation:** Free standing