EFX 30.1 FRYER

Modular fryer hob with stainless steel cooking surface, 30cm

Autolock

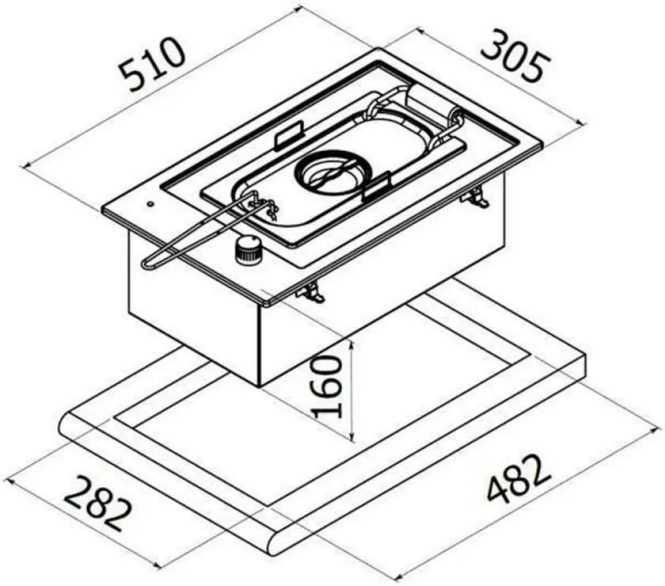

REFERENCE

REF: 40214450 EAN: 8421152156346

FEATURES

Modular fryer hob
Frontal control knobs
Maximum nominal power 2300 W

DIMENSIONS

Product height (mm): 45
Product width (mm): 305
Product depth (mm): 510
Product length (mm):
Net weight (Kg): 7,21

TECHNICAL DETAILS

Power rate (V): 220/240
Frequency (Hz): 50/60
Maximum Nominal Power (W): 2300

COLOURS

40214450 Stainless steel

ENERGY EFFICIENCY

Power consumption in standby mode (W): -
Time to reach standby mode (min): -