EASY **TBC 64000 XFL**

Vitroceramic hob with 4 zones in 60 cm

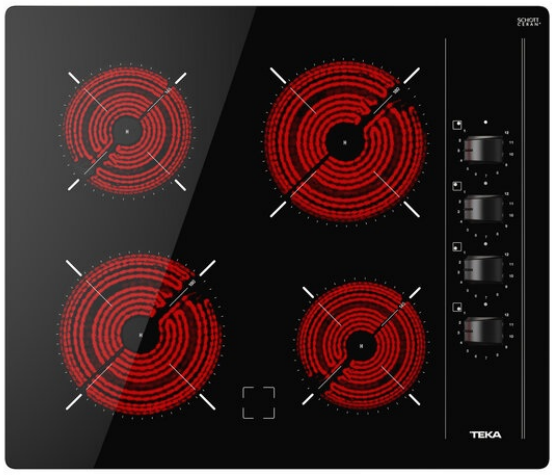

Autolock

Easy installation

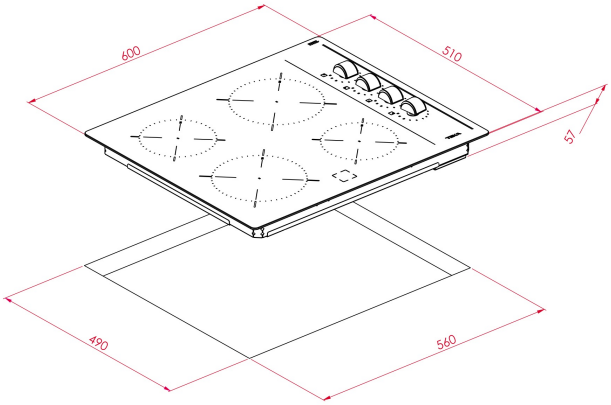

REFERENCE

REF: 112550009 EAN: 8434778014501

FEATURES

Urban Colors Edition
Vitroceramic hob
4 cooking zones
2 high lights Ø 180 mm
2 high lights Ø 145 mm
Ceramic glass surface
Automatic safety disconnection
Residual heat indicator
Easy installation kit
Maximum nominal power 6000 W
Optional: Grilling plate
Optional: Teppanyaki

DIMENSIONS

Product height (mm): 57
Product width (mm): 600
Product depth (mm): 510
Product length (mm):
Net weight (Kg): 7,6

TECHNICAL DETAILS

Power rate (V): 220-240
Frequency (Hz): 50/60
Maximum Nominal Power (W): -

COLOURS

112550009 Black Glass