TOTAL **GZC 64300 XB**

Gas on Glass Hob in 60cm with ExactFlame function

Auto ignition | Autolock | ExactFlame | Easy installation

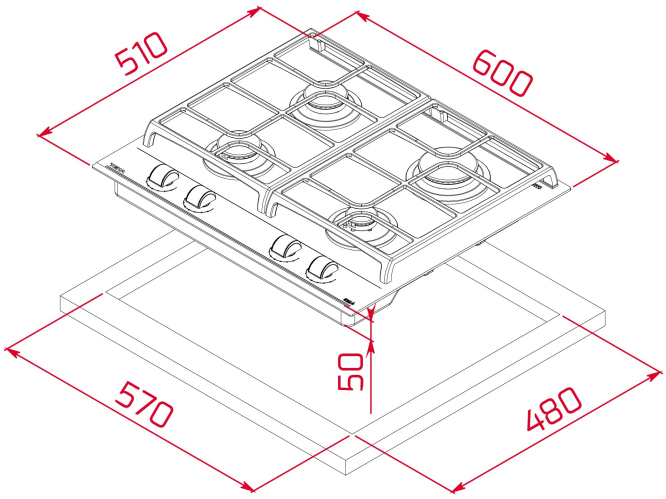

REFERENCE

REF: 112570194 EAN: 8434778019438

FEATURES

Urban Colors Edition
Gas on glass hob
ExactFlame
Frontal control knobs with ergonomic design
4 cooking zones
1 fast burner, 2.8 kW
1 semi fast burner, 1.7 kW
1 semi fast burner, 1.4 kW
1 auxiliary burner, 1 kW
Ceramic glass surface
Auto ignition
Auto-lock safety system
Cast iron grids
Easy installation kit
Maximum nominal power 6950 W
Silver knobs accessory available

DIMENSIONS

Product height (mm): 98
Product width (mm): 600
Product depth (mm): 510
Product length (mm):
Net weight (Kg): 11,14

TECHNICAL DETAILS

Power rate (V): 220-240
Frequency (Hz): 50/60
Maximum Nominal Power (W): -

COLOURS

112570194 Black Glass