MAESTRO **CLC 835 MC BK-SS**

Multi capsule and ground built-in coffee machine with 19 bar pump pressure and TFT display

Capsules Ground coffee

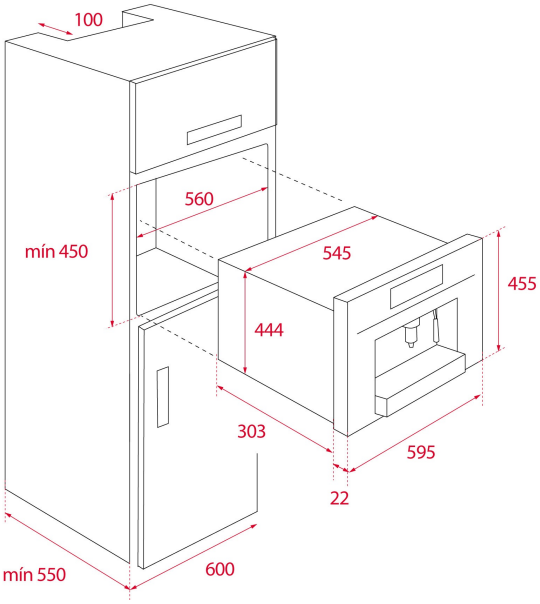

REFERENCE

REF: 40589513 EAN: 8421152145616

FEATURES

Urban Colors Edition
Multi capsule and ground built-in coffee machine
Coffee size regulation
Touch control display with knobs
Capacity: 1 cup
Adjustable height system for different cup sizes
Milk frother and hot water pipe
Availability for ground coffee
3 storage drawers
19 bar pump pressure
1 litre water tank
Descaling function
Capsule adaptors suitable for:
Nespresso®,Lavazza®,Caffitaly®,E.S.E.

DIMENSIONS

Product height (mm): 455
Product width (mm): 595
Product depth (mm): 330
Product length (mm):
Net weight (Kg): 18,7

TECHNICAL DETAILS

Power rate (V): 230
Frequency (Hz): 50
Maximum Nominal Power (W): 2200

COLOURS

40589513 Black Glass with StainlessSteel frame

111630000 White Glass with StainlessSteel frame