UNI 9331
Single lever kitchen tap with high spout pull-out

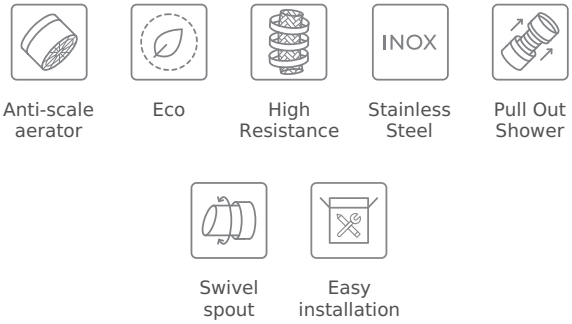

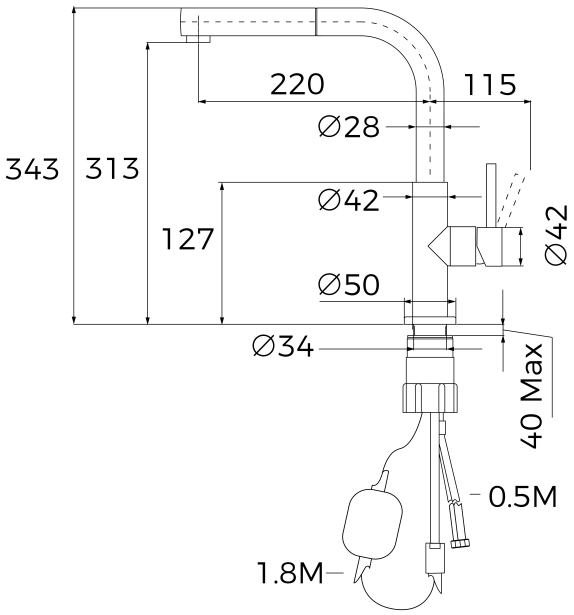

REFERENCE

REF: 116020022 EAN: 8434778033830

FEATURES

Universal Series
High spout kitchen tap with hidden pull-out
Fully made in high quality stainless steel (AISI 304)
Swivel spout 360º
Pull-out 1 function: normal water jet
Extra resistant pull-out hose
Anti-scale Eco aerator with water-saving 5 l/min flow restriction
Eco cartridge (C3) with cold start, water and energy savings
Cartridge with ceramic discs of high resistance and smoother movements
Easy-Quick fixation system
Highly resistant 3/8” flexible inlet pipes with 1/2” adapters included

DIMENSIONS

Product height (mm): 343
Product width (mm):
Product depth (mm):
Product length (mm):
Net weight (Kg): 2,8

COLOURS

116020022 Stainless steel
116020023 Black