Brooklyn 50 M-XP 1B Top/Flush stainless steel sink with one bowl

Antibacterial

DESCRIPTION	Top/Flush stainless steel sink with one bowl
LIFE STYLE	Maestro
COLOURS	
REFERENCE	REF. 115000057 EAN. 8434778019629

Brooklyn 50 M-XP 1B

FEATURES

Brooklyn Series
Stainless steel sink, Polished finish
One bowl
2-in-1 installation possibilities: top or flush
V-control 3½” automatic waste basket with siphon
New HelixPRO waste basket
SilentSmart, 50% less noise
210 mm deep bowl
50 cm base unit

Brooklyn 50 M-XP 1B

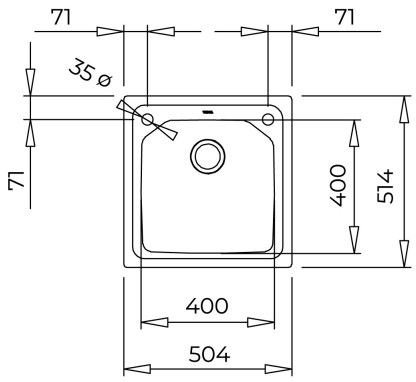

DIMENSIONS

Product height (mm):
Product width (mm): 514
Product depth (mm):
Product length (mm): 504
Net weight (Kg): 3,64

TECHNICAL DETAILS

MAIN BOWL	**Main Bowl Length (mm):** 400 **Main Bowl Width (mm):** 400 **Main Bowl Depth (mm):** 210
OTHER FEATURES	**Material:** Stainless Steel **Type of installation:** Top,Flush **Number of tap holes:** 2 **Valve hole type:** 3½" **Overflow hole:** Rectangular **Sink Bowl / Top thickness (mm):** 1,0 / 1,0
OTHERS	**Base unit (cm):** 50
SINK LAY OUT	**Number of bowls:** 1 **Number of drainers:** 0

ACCESSORIES	**Soundproof:** Yes **SilentSmart:** Yes **Installation clips:** Yes **Siphon:** Yes