HLB 8400 P ST

Urban Colors Edition. Multifunction pyrolytic oven with 8 cooking functions

70L | Plus extension guides: 75% extraction | HydroClean steam cleaning system | Pyrolysis cleaning system | SurroundTemp

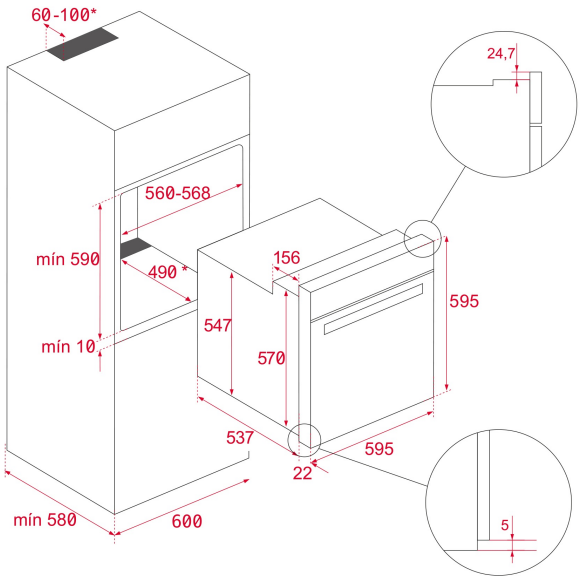

REFERENCE

REF: 111000009 EAN: 8434778007619

FEATURES

Urban Colors Edition
Multifunction SurroundTemp oven
8 cooking functions
Pyrolysis self-cleaning system and automatic HydroClean system
Touch control display with knobs
Electronic timer (Delay/Start function)
Chrome supports with 5 cooking levels
Plus-extension telescopic guides
Removable quadruple glazed door
Automatic disconnection safety system
Children safety lock
Manual quick preheating
Anti-tip deep tray
Capacity (gross/net): 71 / 70 litres

DIMENSIONS

Product height (mm): 595
Product width (mm): 595
Product depth (mm): 537+22
Product length (mm):
Net weight (Kg): 34

TECHNICAL DETAILS

Energy Efficiency Class: A+
Power rate (V): 220-240
Frequency (Hz): 50/60
Maximum Nominal Power (W): 3552

COLOURS

111000009	Stone grey glass
111000008	White glass
111000008	Black glass