EASY **IN 024**

Wall Kitchen Tap Mixer with swivel spout and anti-scale aerator

Anti-Scale Aerator

Swivel Spout

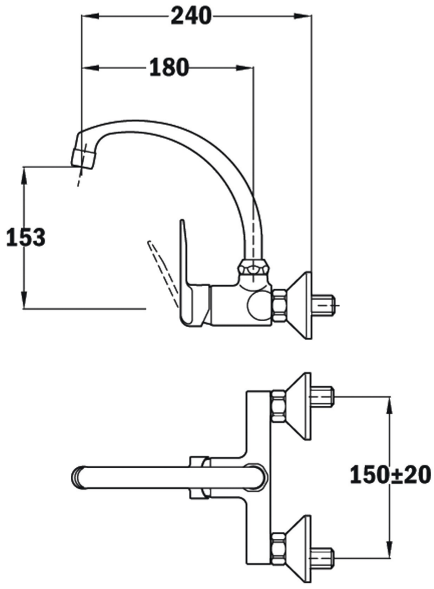

REFERENCE

REF: 5302412 EAN: 8421152091500

FEATURES

Wall mounted kitchen tap
Swivel spout 180 mm
Anti-scale aerator
Cartridge with ceramic discs of high resistance
Highly precise temperature control
Greater handling sensitivity with smoother movements
Equipped with noise reducers

DIMENSIONS

Product height (mm):
Product width (mm): 150
Product depth (mm): 240
Product length (mm):
Net weight (Kg): 3

COLOURS

5302412 Chrome