Clivo 45 B-TQ 1B 1D
Inset Tequartz sink with one bowl and one drainer

Colour Intensity | Easy Clean | Food safe | High resistance

REFERENCE

REF: 40148000 EAN: 8421152136690

FEATURES

Tequartz sink
One bowl and one drainer
Inset installation
3½" automatic basket waste with siphon
190 mm deep bowl
45 cm base unit

DIMENSIONS

Product height (mm):
Product width (mm): 495
Product depth (mm): 190
Product length (mm): 780
Net weight (Kg): 16,80
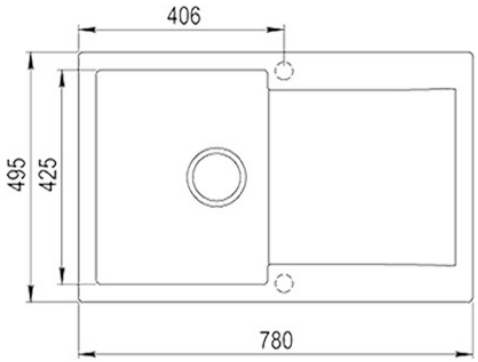
COLOURS