TOTAL **EH-90 5G AI TR CI BUT**

Gas hob with 5 burners and cast iron grids

Auto ignition

Autolock

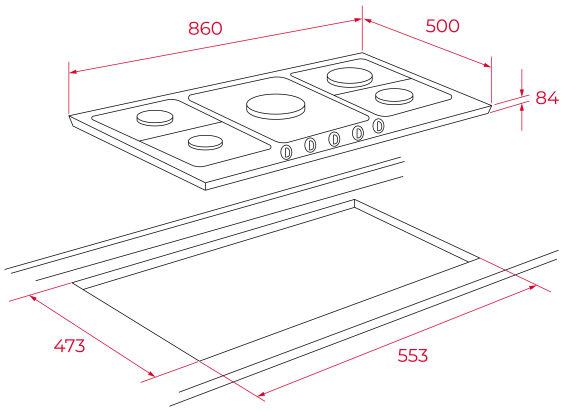

REFERENCE

REF: 112610026 EAN: 8434778017748

FEATURES

Gas + vitroceramic hob
Auto-ignition
Auto-lock safety system
Cast iron grids
Maximum nominal power: 600 W

DIMENSIONS

Product height (mm): 500
Product width (mm): 860
Product depth (mm): 850
Product length (mm):
Net weight (Kg): 11,5

TECHNICAL DETAILS

Power rate (V): -
Frequency (Hz): 50/60
Maximum Nominal Power (W): -

COLOURS

112610026 Stainless Steel