RVI 20041 GBK
Built-in wine cooler with capacity for 41 bottles and adjustable temperature control

REFERENCE

REF: 113600010 EAN: 8434778021127

FEATURES

Built-in Wine Cooler
Inner control display
Electronic adjustable thermostat
Capacity: 41 bottles
Front and back adjustable feet
LED Illumination
Reversible doors
Climate class: N/ST
Total capacity (Gross/net): 100 / 83 litres

Motor Inverter LED

DIMENSIONS

Product height (mm): 595
Product width (mm): 590
Product depth (mm): 563
Product length (mm):
Net weight (Kg): 38
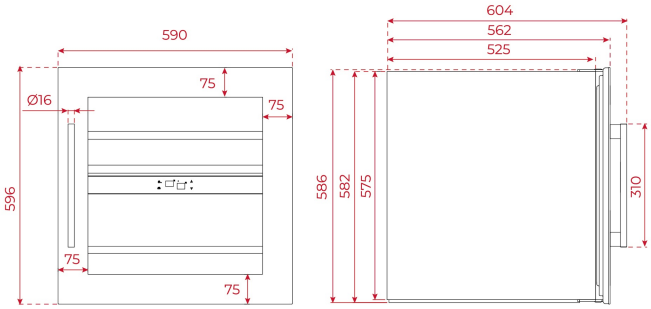
COLOURS