TB 6315 60cm Vitroceramic Hob with 3 zones and Touch Control

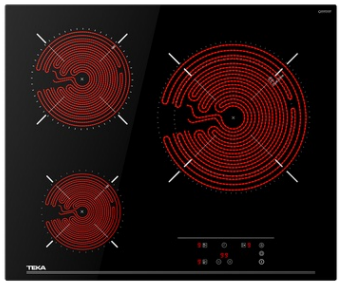

Autolock | Power Plus | Easy installation

DESCRIPTION	60cm Vitroceramic Hob with 3 zones and Touch Control
LIFE STYLE	Easy
COLOURS	
REFERENCE	REF. 40239032 EAN. 8421152148235

TB 6315

FEATURES

Vitroceramic hob
Touch Control
3 cooking zones
1 high lights Ø 210/270 mm
1 high lights Ø 180 mm
1 high lights Ø 145 mm
Ceramic glass surface
Easy installation kit
Maximum nominal power 5400 W
Optional: Grilling plate
Optional: Teppanyaki

TEKA

TB 6315

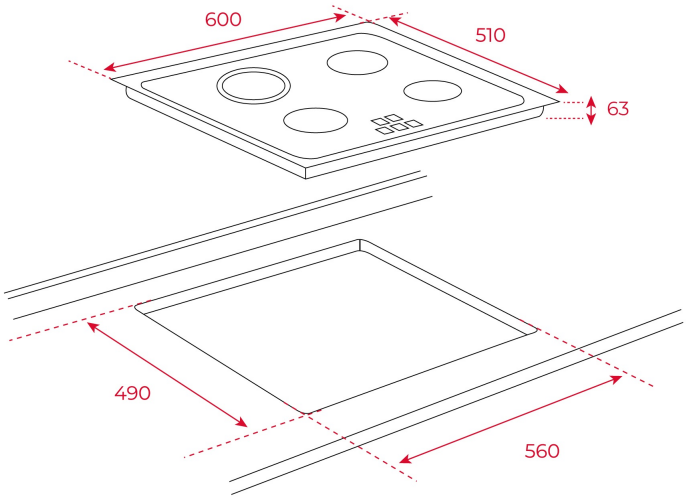

DIMENSIONS

Product height (mm): 51
Product width (mm): 600
Product depth (mm): 510
Product length (mm):
Net weight (Kg): 8,7

TECHNICAL DETAILS

FITTING MEASURES	**Built-in Width (mm):** 560 **Built-in Depth (mm):** 490 **Built-in height (mm):** 51
FEATURES	**Number of electric power levels:** 9
ELECTRIC CONNECTION	**Frequency (Hz):** 50/60 **Power rate (V):** 220-240 **Cable Connection Length (cm):** 110 **Maximum Nominal Power (W) (Electric hob):** 5400
COOKING ZONES	**Cooking Zones:** 3 **Energy consumption for the whole hob, Wh/Kg:** 188,32
SAFETY SYSTEMS	**Residual heat indicator (Gas):** Yes **Residual heat indicator (Electric hob):** Yes

Automatic safety disconnection (Auto Lock) (Electric hob): Yes
Safety Blocking: Yes
Child lock: Yes

FINISH

Surface finishing: C-edged glass
Surface type: Ceramic Glass (4mm)
Easy installation system: Yes

ACCESSORIES

Junction Kit: NO
Teppan Yaki: Optional