# **DOS 90.1 AB** 90cm Wall-mounted Rustic-style Extractor Hood

LED

LED

| | |
|---|---|
| **DESCRIPTION** | 90cm Wall-mounted Rustic-style Extractor Hood |
| **LIFE STYLE** | Total |
| **COLOURS** | |
| **REFERENCE** | REF. 40489333<br>EAN. 8421152127971 |

# DOS 90.1 AB

**FEATURES**

Country Style Edition
Decorative pyramidal hood
Electronic control
3 speeds
Free Outlet exhaust capacity (m3/h): 650
Max speed exhaust capacity (m3/h): 603
Min speed exhaust capacity (m3/h): 256
Max speed sound level (dBA): 66
Min speed sound level (dBA): 51
2 LED lamps
2 Aluminum filters
Operating pilot light
Anti-return valve included
Outlet reduction included
Optional recirculation kit with tube cover installation: SET 4/D
Optional Charcoal Filter: D5C

# DOS 90.1 AB

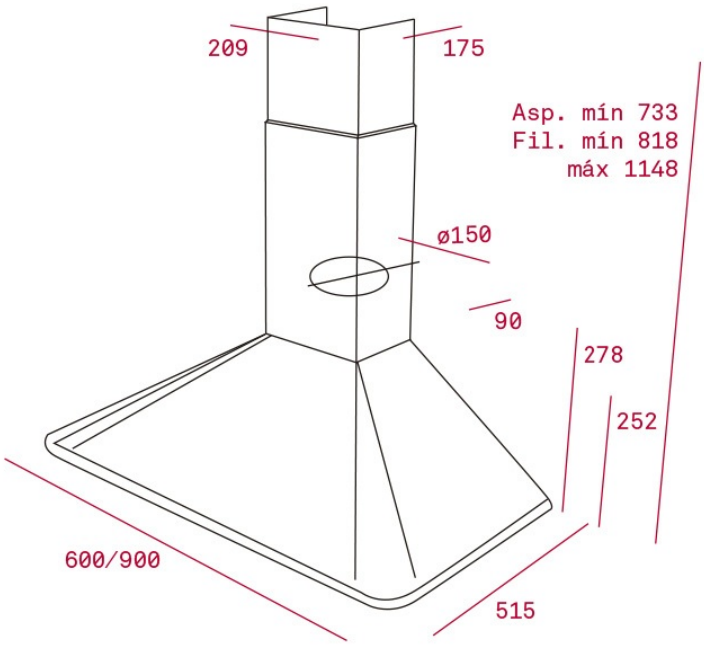


## DIMENSIONS

**Product height (mm):** 733-1148
**Product width (mm):** 600/900
**Product depth (mm):** 500
**Product length (mm):**
**Net weight (Kg):** 13,2

## TECHNICAL DETAILS

### FEATURES

**Certificates:** CE; CB; Rohs
**Ø Outlet (mm):** 150
**Type of inner light:** LED
**Inside light Consumption (W):** 3
**Plug type:** European Plug
**Power rate (V):** 220-230
**Frequency (Hz):** 50-60
**Total hood power (W):** 290
**Number of motors:** 1
**Motor power (W):** 250
**Air flow (Qmin) m3/h:** 256.0
**Air flow (Qmax):** 603.0

### ACCESSORIES

**Anti Return valve:** Yes
**Outlet reduction:** Yes
**Optional Charcoal Filter:** D5C
**Conventional recirculation kit (opt) - w/tube cover:** SET 4/D

### MODELS

**Number of filters:** 2

**Filter description:** Aluminum
**Control panel:** Electronic Control
**Number of speeds:** 3

# DOS 90.1 AB
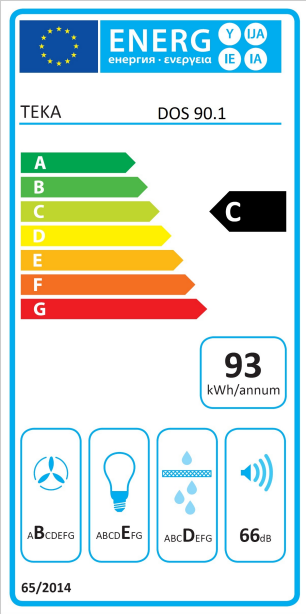
## ENERGY LABEL