MSC 642 Built-in Microwave + Grill with 3 Cooking Functions in 45cm

Defrost By Time

44L

DESCRIPTION	Built-in Microwave + Grill with 3 Cooking Functions in 45cm
LIFE STYLE	Total
COLOURS	
REFERENCE	REF. 40586800 EAN. 8421152145487

MSC 642

FEATURES

Microwave + Grill
3 cooking functions
5 power levels + 1000 W microwave power
1400 W grill
Defrost by time
Mechanical control knobs
Mechanical timer (Stop function)
Chrome supports with 5 cooking levels
Removable double glazed door
Automatic disconnection security system
Glass tray and reinforced grid
Capacity (gross/net): 45 / 44 litres

MSC 642

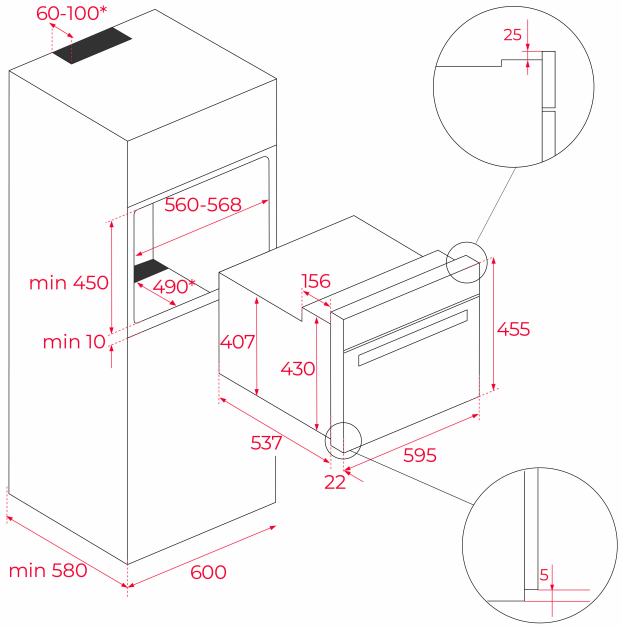

DIMENSIONS

Product height (mm): 455
Product width (mm): 595
Product depth (mm): 559
Product length (mm):
Net weight (Kg): 28,4

TECHNICAL DETAILS

FEATURES

Certificates: CE/CB
Number of cavities: 1
Type of inner light: Halogen
Inside light position: Top rear right
Enamelled cavity: Yes
Function selector: Mechanical
Number of cooking functions: 3
Grill function: Yes
Minute Minder: Yes
Knobs type: MMX FIX KNOB
Removable chromed tray guides: Yes
Number of guide levels: 5
Number of guide levels (lower cavity): 0
Forced refrigeration tangential 1 speed: Yes
Microwave function: Yes
Microwave + Grill function: Yes
Microwave defrosting: Yes
Number of power levels: 5
Tangential ventilation: Yes

ELECTRIC CONNECTION

Maximum Nominal Power (W): 3200
Frequency (Hz): 50
Power rate (V): 220-240
Cable Connection Length (cm): 110
Inside light Consumption (W): 25

ENERGY CONSUMPTION

Grill (W): 1400
Cooling Fan Motor (W): 18

SAFETY SYSTEMS

Automatic disconnection when opening the door: Yes
Grill protection: Yes
Safety Thermostat: Yes

CLEANING SYSTEM

Fingerprint proof stainless steel: Yes
Crystal Clean Enamel (Slippery): Yes

ACCESSORIES

Glass Tray: 1
Reinforced grid: 1