HLC 8471 SC SurroundTemp Compact Steam Multifunction Oven in 45cm with HydroClean system

44L | MeatProbe | HydroClean | SoftClose | SurroundTemp

DESCRIPTION	SurroundTemp Compact Steam Multifunction Oven in 45cm with HydroClean system
LIFE STYLE	Maestro
COLOURS	
REFERENCE	REF. 111230003 EAN. 8434778003574

HLC 8471 SC

FEATURES

Urban Colors Edition
Multifunction SurroundTemp oven + Steamer
15 cooking functions
Temperature range 30-100 ºC
1 litre water tank
Automatic HydroClean system
Touch control display with knobs
Electronic timer (Delay/Start function)
Personal cooking assistant: 20 automatic programs
Slow cook, sterilization and regeneration function
Chrome supports with 5 cooking levels
Removable quadruple glazed door
SoftClose system
Automatic disconnection security system
Children safety lock
Automatic quick preheating
Anti-tip deep tray,anti-tip gastronorm tray, reinforced grid and
Special grid for perforated tray
MeatProbe included
Capacity (gross/net): 45 /44 litres

HLC 8471 SC

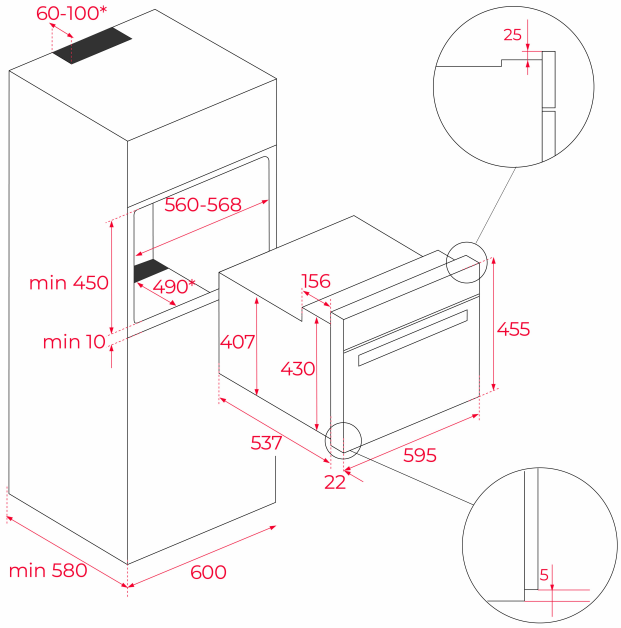

DIMENSIONS

Product height (mm): 455
Product width (mm): 595
Product depth (mm): 559
Product length (mm):
Net weight (Kg): 28

TECHNICAL DETAILS

FEATURES

Certificates: CE/CB / CCC
Type of inner light: Halogen
Inside light position: upper rear right
Enamelled cavity: Yes
Min. Temperature Regulator (ºC): 50
Max. Temperature Regulator (ºC): 250
Function selector: ELECTRONIC
Number of cooking functions: 15
Number of recipes: 20
Top + Bottom function: Yes
Grill + Bottom function: Yes
Grill function: Yes
MaxiGrill function: Yes
Top + Bottom + Fan function: Yes
Bottom function: Yes
Bottom + TURBO (Pizza) function: Yes
Turbo function: Yes
ECO function: Yes
Automatic quick heating: Yes
Slow Cook: Yes
Knobs type: MMX FIX KNOB
Ring illuminated: Yes

Removable chromed tray guides: Yes
Number of guide levels: 4
Number of guide levels (lower cavity): 0
Forced refrigeration tangential 1 speed: Yes
SoftClose: Yes

ELECTRIC CONNECTION

Maximum Nominal Power (W): 3000
Frequency (Hz): 50/60
Power rate (V): 220-240
Cable Connection Length (cm): 110
Plug: Yes
Inside light Consumption (W): 25

ENERGY CONSUMPTION

Bottom Heating Element (W): 1150
Grill (W): 1400
Maxi Grill (W): 2500
Traditional (W): 2250
Turbo (W): 1800
Multifunction Turbo (W): 22
Cooling Fan Motor (W): 35

SAFETY SYSTEMS

Automatic disconnection when opening the door: Yes
Panel blocking system: Yes
Children safety block option: Yes
Grill protection: Yes
Anti-tip tray system: Yes
Safety Thermostat: Yes

CLEANING SYSTEM

Fingerprint proof stainless steel: Yes
Crystal Clean Enamel (Slippery): Yes
Hydroclean PRO: Yes

ACCESSORIES

Deep Tray (50 mm): 1
Reinforced grid: 1
Meat Probe: 1

ENERGY EFFICIENCY

Energy Efficiency Class: A+