HRB 6300 VNS 60 cm Country Style Edition SurroundTemp Multifunction Oven

70L | Plus Extension Telescopic Guide | HydroClean | SurroundTemp

DESCRIPTION	60 cm Country Style Edition SurroundTemp Multifunction Oven
LIFE STYLE	Total
COLOURS	
REFERENCE	REF. 111010013 EAN. 8434778008647

HRB 6300 VNS

FEATURES

Country Style Edition
Multifunction SurroundTemp oven
9 cooking functions
Automatic HydroClean system
Mechanical control knobs
Mechanical timer
Chrome supports with 5 cooking levels
Telescopic guides basic
Removable double glazed door
Manual quick preheating
Anti-tip deep tray
Capacity (gross/net): 71 / 70 litres

HRB 6300 VNS

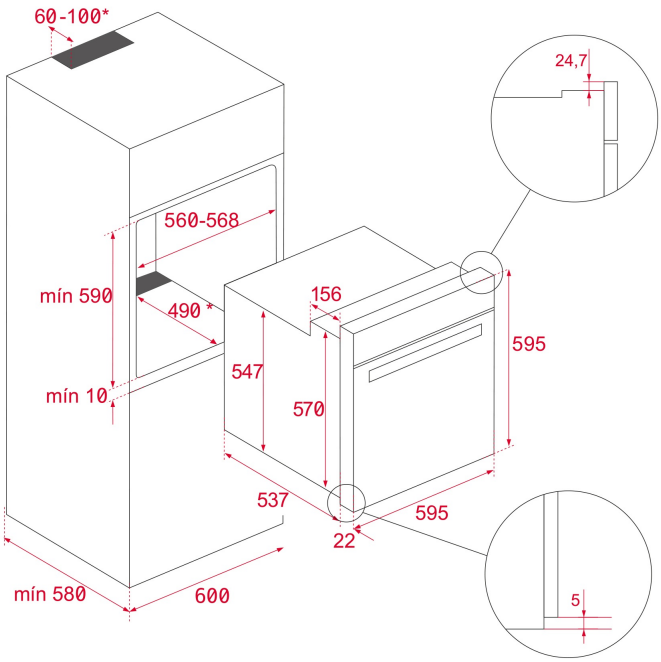

DIMENSIONS

Product height (mm): 595
Product width (mm): 595
Product depth (mm): 537+22
Product length (mm):
Net weight (Kg): 27

TECHNICAL DETAILS

FEATURES

Certificates: N / CE / CCA / CB/ EAC
Number of cavities: 1
Type of inner light: Halogen
Inside light position: RIGHT TOP CORNER
Enamelled cavity: Yes
Min. Temperature Regulator (ºC): 50
Max. Temperature Regulator (ºC): 250
Function selector: 11+0
Number of cooking functions: 9
Number of memories: 2
Top + Bottom function: Yes
Grill function: Yes
MaxiGrill function: Yes
MaxiGrill + Fan function: Yes
Bottom function: Yes
Bottom + TURBO (Pizza) function: Yes
Turbo function: Yes
ECO function: Yes
Mechanical quick heating: Yes
Minute Minder: Yes
Knobs type: Old Silver
Removable chromed tray guides: Yes

Number of guide levels: 5

ELECTRIC CONNECTION

Maximum Nominal Power (W): 3215
Frequency (Hz): 50/60
Power rate (V): 220/240
Cable Connection Length (cm): 150
Plug: Yes
Inside light Consumption (W): 25

ENERGY CONSUMPTION

Energy consumption per cycle in conventional mode (kWh): 0.82
Energy consumption per cycle in fan-forced convection mode (kWh): 0,76
Bottom Heating Element (W): 1150
Grill (W): 1400
Maxi Grill (W): 2500
Traditional (W): 2550
Turbo (W): 2000
Multifunction Turbo (W): 22
Cooling Fan Motor (W): 18

SAFETY SYSTEMS

Grill protection: Yes
Anti-tip tray system: Yes
Safety Thermostat: Yes

CLEANING SYSTEM

Crystal Clean Enamel (Slippery): Yes
Hydroclean PRO: Yes

ACCESSORIES

Baking Tray: 1
Deep Tray (50 mm): 1
Standard grid: 1
Baking Tray (lower cavity): 1
Deep Tray (lower cavity) (50 mm): 1

ENERGY EFFICIENCY

Energy Efficiency Class: A
Energy Efficiency Index (EEI): 81

HRB 6300 VNS
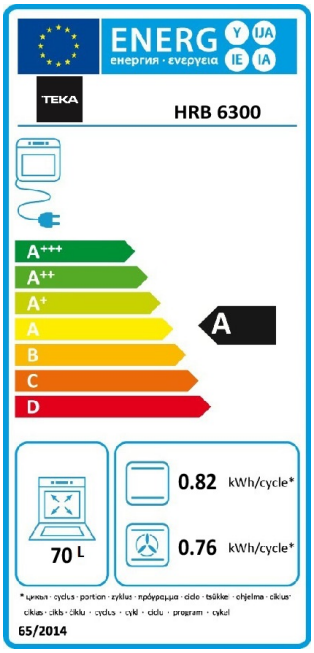
ENERGY LABEL