TZC 32320 TTC 30cm Modular Vitroceramic Hob with Touch Control

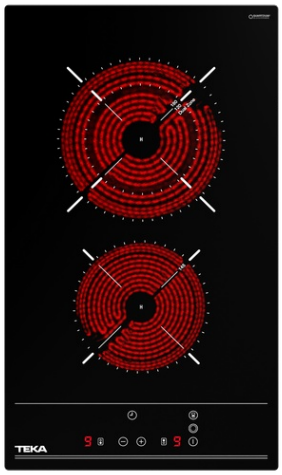

Autolock

Easy installation

DESCRIPTION	30cm Modular Vitroceramic Hob with Touch Control
LIFE STYLE	Total
COLOURS	
REFERENCE	REF. 112540002 EAN. 8434778012651

TZC 32320 TTC

FEATURES

Urban Colors Edition
VarioPro Series
Modular Vitroceramic hob
Touch Control
2 cooking zones
1 high lights Ø 120/180 mm
1 high lights Ø 145 mm
Ceramic glass surface
Cooking timer
Residual heat indicator
Easy installation kit
Maximum nominal power 2900 W
Optional: Grilling plate
Optional: Teppanyaki

TZC 32320 TTC

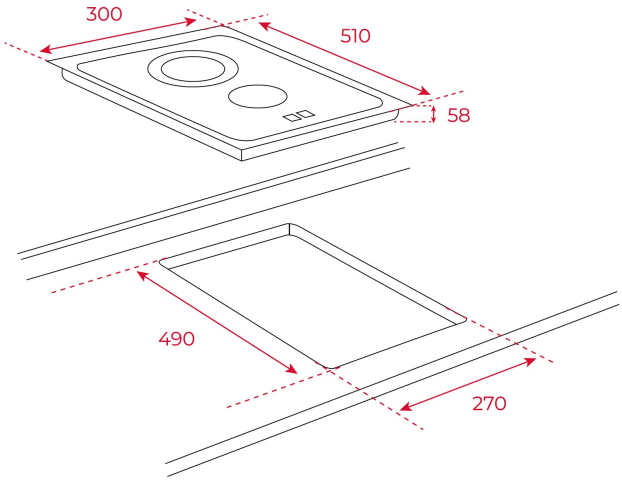

DIMENSIONS

Product height (mm): 58
Product width (mm): 300
Product depth (mm): 510
Product length (mm):
Net weight (Kg): 4,26

TECHNICAL DETAILS

FITTING MEASURES	**Built-in Width (mm):** 270 **Built-in Depth (mm):** 490 **Built-in height (mm):** 58
FEATURES	**Number of electric power levels:** 9
ELECTRIC CONNECTION	**Maximum Nominal Power (W):** 2900 **Frequency (Hz):** 50/60 **Power rate (V):** 220-240 **Cable Connection Length (cm):** 110 **Maximum Nominal Power (W) (Electric hob):** 2900
COOKING ZONES	**Cooking Zones:** 2 **Energy consumption for the whole hob, Wh/Kg:** 190,175
SAFETY SYSTEMS	**Residual heat indicator (Gas):** Yes

Residual heat indicator (Electric hob): Yes
Automatic safety disconnection (Auto Lock) (Electric hob): Yes
Child lock: Yes

FINISH

Surface finishing: Front bevelled glass
Surface type: Ceramic Glass (4mm)
Easy installation system: Yes

ACCESSORIES

Junction Kit: Optional
Teppan Yaki: Optional