DLV 98660 TOS BK Vertical decorative hood with Fresh air function in 90cm

LED

Perimeter extraction

Stop Delay Timer

Fresh AIR

DESCRIPTION	Vertical decorative hood with Fresh air function in 90cm
LIFE STYLE	Maestro
COLOURS	
REFERENCE	REF. 112930029 EAN. 8434778011937

DLV 98660 TOS BK

FEATURES

Urban Colors Edition
Decorative vertical hood
Touch control with display
FreshAir function
3 speeds + 1 intensive
Intensive speed exhaust capacity (m3/h): 696
Max speed exhaust capacity (m3/h): 558
Min speed exhaust capacity (m3/h): 290
Intensive speed sound level (dBA): 69.9
Max speed sound level (dBA):66.5
Min speed sound level (dBA): 51.4
1 LED lamp
2 Aluminum filters
Stop delay timer
Filer saturation indicator
Anti-return valve included
Outlet reduction included
Optional recirculation kit with tube cover installation: CFH 15200 L3C
Optional regenerative recirculation kit with tube cover installation: RFH 15200 L3C
Optional recirculation kit without tube cover installation:CFH 15200 O2C
Optional Charcoal Filter: C1RTK
Optional Regenerative filter: R1RTK

DLV 98660 TOS BK

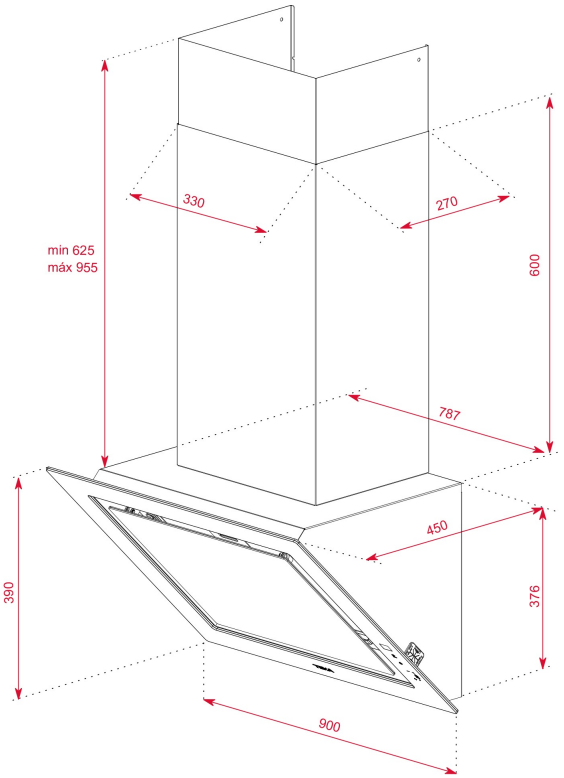

DIMENSIONS

Product height (mm): 1001-1331
Product width (mm): 900
Product depth (mm): 450
Product length (mm):
Net weight (Kg): 20,27

TECHNICAL DETAILS

FEATURES

Ø Outlet (mm): 150
Removable oil collector: Yes
Type of inner light: LED BAR
Inside light Consumption (W): 7,5
Plug type: Schuko plug
Cable Connection Length (cm): 100
Power rate (V): 220-240
Frequency (Hz): 50/60
Total hood power (W): 272,5
Number of motors: 1
Motor power (W): 265
Air flow (Qmin) m3/h: 290
Air flow (Qmax): 558
Air flow (Qboost): 696

ACCESSORIES

Anti Return valve: Yes
Outlet reduction: Yes
Outlet extension: No
Optional Charcoal Filter: C1RTK
Regenerative charcoal filter: R1RTK

Conventional recirculation kit (opt) - w/tube cover: CFH 15200 L3C
Regenerative recirculation kit (opt) - w/tube cover: RFH 15200 L3C
Conventional recirculation kit (opt) - w/o tube cover: CFH 15200 O2C
Regenerative recirculation kit (opt) - w/o tube cover: RFH 15200 O2C

MODELS

Number of filters: 2
Filter description: Aluminum filters
Opening system: Piston
Control panel: Touch control white display
Stop delay timer: Yes
Filter saturation indicator: Yes
Time clock: Yes
Number of speeds: 3 + 1
Fresh air function: Yes

DLV 98660 TOS BK
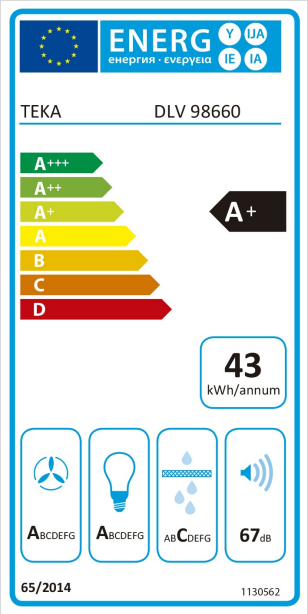
ENERGY LABEL