HSB 620P 60cm A+ Multifunction Pyrolytic Oven

70L | DualClean | HydroClean | Pyrolysis

DESCRIPTION	60cm A+ Multifunction Pyrolytic Oven
LIFE STYLE	Total
COLOURS	
REFERENCE	REF. 41566033 EAN. 8421152157725

HSB 620P

FEATURES

Multifunction oven
8 cooking functions
Pyrolysis self-cleaning system and automatic HydroClean system
Mechanical control knobs
Electronic timer
Chrome supports with 5 cooking levels
Removable triple glazed door
Children safety lock
Automatic disconnection safety system
Manual quick preheating
Anti-tip deep tray
Capacity (gross/net): 71 / 70 litres

HSB 620P

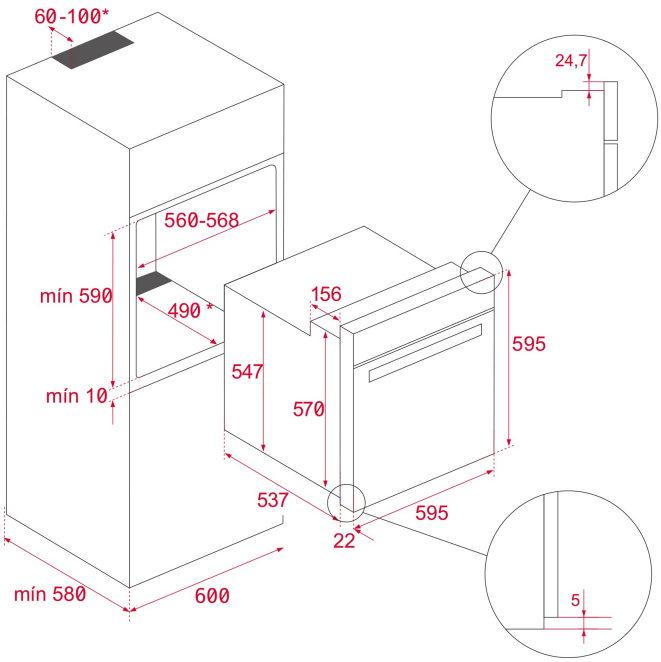

DIMENSIONS

Product height (mm): 595
Product width (mm): 595
Product depth (mm): 537+22
Product length (mm):
Net weight (Kg): 31

TECHNICAL DETAILS

FEATURES

Certificates: N / CE / CCA / CB
Number of cavities: 1
Type of inner light: Halogen
Inside light position: RIGHT TOP CORNER
Enamelled cavity: Yes
Min. Temperature Regulator (ºC): 50
Max. Temperature Regulator (ºC): 250
Function selector: 11+0
Number of cooking functions: 8
Top + Bottom function: Yes
Grill function: Yes
MaxiGrill function: Yes
Top + Bottom + Fan function: Yes
MaxiGrill + Fan function: Yes
Bottom function: Yes
ECO function: Yes
Mechanical quick heating: Yes
Touch Control Programmer: Yes
Knobs type: MMX FIX knurling
Removable chromed tray guides: Yes
Number of guide levels: 5

ELECTRIC CONNECTION	**Maximum Nominal Power (W):** 3552 **Frequency (Hz):** 50/60 **Power rate (V):** 220-240 **Cable Connection Length (cm):** 110 **Inside light Consumption (W):** 25
ENERGY CONSUMPTION	**Energy consumption per cycle in conventional mode (kWh):** 0.88 **Energy consumption per cycle in fan-forced convection mode (kWh):** 0,68 **Bottom Heating Element (W):** 1050 **Grill (W):** 1400 **Maxi Grill (W):** 2450 **Traditional (W):** 2450 **Multifunction Turbo (W):** 25 **Cooling Fan Motor (W):** 30
SAFETY SYSTEMS	**Automatic disconnection when opening the door:** Yes **Panel blocking system:** Yes **Children safety block option:** Yes **Grill protection:** Yes **Anti-tip tray system:** Yes **Safety Thermostat:** Yes
CLEANING SYSTEM	**Crystal Clean Enamel (Slippery):** Yes **Hydroclean PRO:** Yes **Pyrolytic:** Yes **DualClean:** Yes
ACCESSORIES	**Deep Tray (50 mm):** 1 **Standard grid:** 1
ENERGY EFFICIENCY	**Energy Efficiency Class:** A+ **Energy Efficiency Index (EEI):** 81

HSB 620P
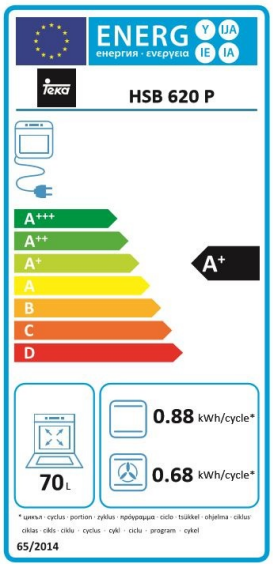
ENERGY LABEL