# **FOT 999** Professional Kitchen Mixer with spout to fill recipients

Saving Water | Anti-Scale Aerator | High Resistance | Pull Down Shower | Resistance | Swivel Spout | Easy_Quick

| | |
|---|---|
| **DESCRIPTION** | Professional Kitchen Mixer with spout to fill recipients |
| **LIFE STYLE** | Maestro |
| **COLOURS** | |
| **REFERENCE** | REF. 116010003<br>EAN. 8434778002836 |

# FOT 999

**FEATURES**

Professional kitchen tap
Swivel and flexible spout
Anti-scale aerator
Pull-down shower with stop function. 1 function: Shower spray
Extra spout to fill recipients
Cartridge with ceramic discs of high resistance
Highly precise temperature control
Greater handling sensitivity with smoother movements
High resistant flexible spring
Stainless steel flexible hose reinforced with plastic for better protection and easy cleaning
Easy-Quick fixation system
3/8" - 1/2" flexible inlet pipes

# FOT 999

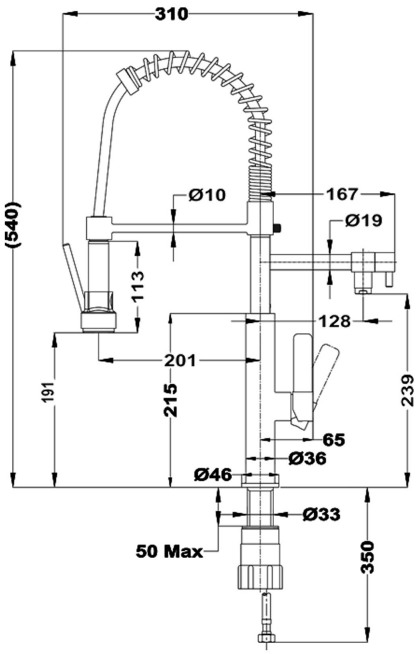


## DIMENSIONS

**Product height (mm):** 540
**Product width (mm):**
**Product depth (mm):** 310
**Product length (mm):**
**Net weight (Kg):** 1,35

## TECHNICAL DETAILS

| | |
|---|---|
| **MODELS** | **Type of installation:** Free standing |