HLC 84-G1 C BM Infinity G1 compact oven. Special edition by Italdesign Giugiaro

40L | HydroClean | SurroundTemp

DESCRIPTION	Infinity G1 compact oven. Special edition by Italdesign Giugiaro
LIFE STYLE	Maestro
COLOURS	
REFERENCE	REF. 111160015 EAN. 8434778022391

HLC 84-G1 C BM

FEATURES

Infinity G1 special edition
Designed in Italy by Italdesign Giugiaro
Multifunction SurroundTemp oven + Microwave
Exclusive matte black finishing
11 cooking functions
5 power levels + 1000 W microwave power
2500 W grill
HydroClean system
Touch control display with knobs
Electronic timer (Delay/Start function)
Chrome supports with 5 cooking levels
Automatic disconnection security system
Anti-tip deep tray, reinforced grid and glass tray
Capacity (gross/net): 41 /40 litres

HLC 84-G1 C BM

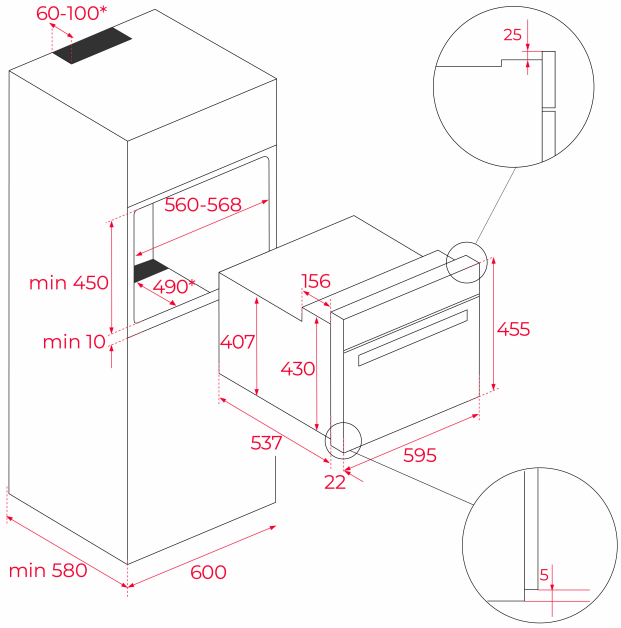

DIMENSIONS

Product height (mm): 455
Product width (mm): 595
Product depth (mm): 559
Product length (mm):
Net weight (Kg): 30,0

TECHNICAL DETAILS

FEATURES

Certificates: CE/CB
Type of inner light: Halogen
Inside light position: Top rear right
Enamelled cavity: Yes
Min. Temperature Regulator (ºC): 50
Max. Temperature Regulator (ºC): 250
Function selector: Mechanical
Number of cooking functions: 11
Top + Bottom function: Yes
MaxiGrill function: Yes
Top + Bottom + Fan function: Yes
MaxiGrill + Fan function: Yes
Bottom function: Yes
Bottom + TURBO (Pizza) function: Yes
Turbo function: Yes
ECO function: Yes
Touch Control Programmer: Yes
Knobs type: MMX FIX KNOB
Removable chromed tray guides: Yes
Number of guide levels: 5
Forced refrigeration tangential 1 speed: Yes
Microwave function: Yes

Microwave + Grill function: Yes
Microwave + Turbo function: Yes
Microwave + Top + Bottom function: Yes
Microwave defrosting: Yes
Number of power levels: 5
Seconds Quick Start: Yes

ELECTRIC CONNECTION

Maximum Nominal Power (W): 3400
Frequency (Hz): 50
Power rate (V): 220-240
Cable Connection Length (cm): 110
Plug: Yes
Inside light Consumption (W): 25

ENERGY CONSUMPTION

Bottom Heating Element (W): 1000
Maxi Grill (W): 2500
Traditional (W): 2100
Turbo (W): 1600
Multifunction Turbo (W): 30
Cooling Fan Motor (W): 18

SAFETY SYSTEMS

Automatic disconnection when opening the door: Yes
Panel blocking system: Yes
Grill protection: Yes
Anti-tip tray system: Yes
Safety Thermostat: Yes

CLEANING SYSTEM

Fingerprint proof stainless steel: Yes
Crystal Clean Enamel (Slippery): Yes
Hydroclean ECO: Yes

ACCESSORIES

Glass Tray: 1
Reinforced grid: 1