STONE 80 B-TG 2B 1D AUTO

Inset Tegranite Sink with two bowls and one drainer





Main bowl depth: 200mm



High quality colour intensity



Easy to clean



Food safe



Scratch Proof

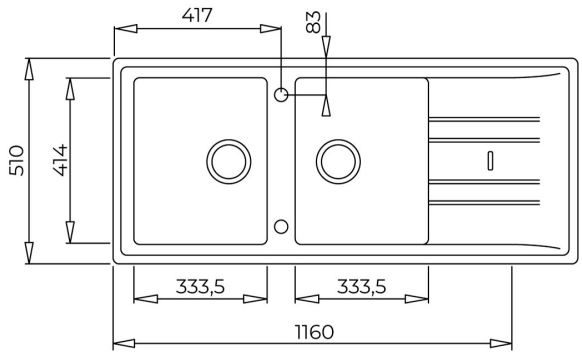

REFERENCE

REF: 115400008 **EAN:** 8434778004908

FEATURES

Tegranite+ sink, Two bowls and one drainer
Inset installation, Reversible drainer
High resistance surface to impacts, thermal shocks and high temperatures
Excellent UV resistance against decoloring
Bacteria-free surface very easy to clean, 80% quartz and resins
3½" automatic basket wastes with overflow and siphon
80 cm base unit
Thickness: 10 mm bowl / 7 mm top
Packaging: Individual carton box

DIMENSIONS

Product height (mm):
Product width (mm): 510
Product depth (mm): 200
Product length (mm): 1160
Net weight (Kg): 18,5

COLOURS

	115400008	Metallic Grey
	115400013	White
	115400011	Metallic Black