HCB 6435

Multifunction oven (Surround Temp) HydroClean PRO 9 cooking functions





HydroClean

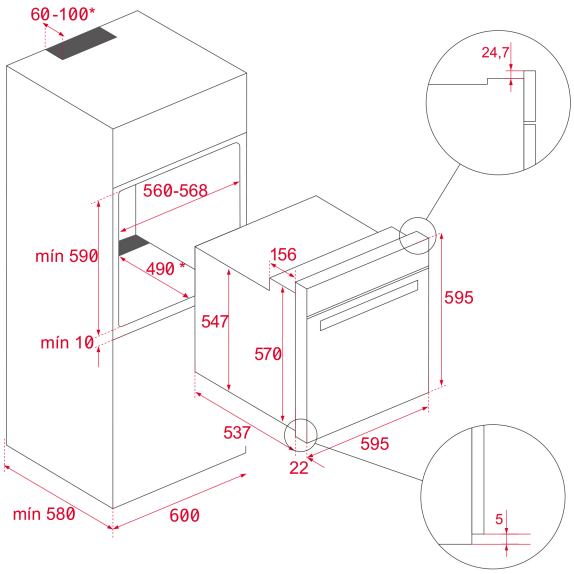

REFERENCE

REF: 111020013 **EAN:** 8434778003192

FEATURES

Multifunction oven
8 Cooking functions
Automatic HydroClean system
Touch control display
Chrome supports with 5 cooking levels
Embossed cavity
Double glazed door
Children safety lock
Mechanical quick preheating
Anti-tip baking tray
Dynamic ventilation
Gross/net capacity: 70/65 litres

DIMENSIONS

Product height (mm): 595
Product width (mm): 595
Product depth (mm): 537+22
Product length (mm):
Net weight (Kg): 27

TECHNICAL DETAILS

Energy Efficiency Class: A+
Power rate (V): 220-240
Frequency (Hz): 50/60
Maximum Nominal Power (W): 2615

COLOURS

111020013 Stainless Steel