TOTAL **IBC 72300 TCS**

70cm Induction Hob with 2 cooking zones and Touch Control Slider

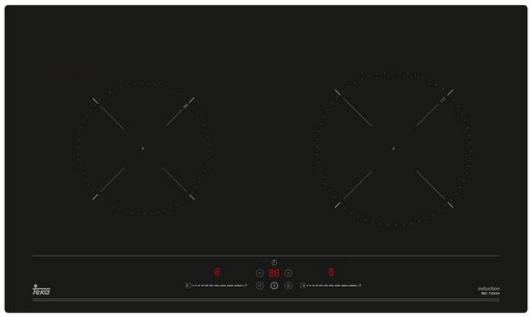

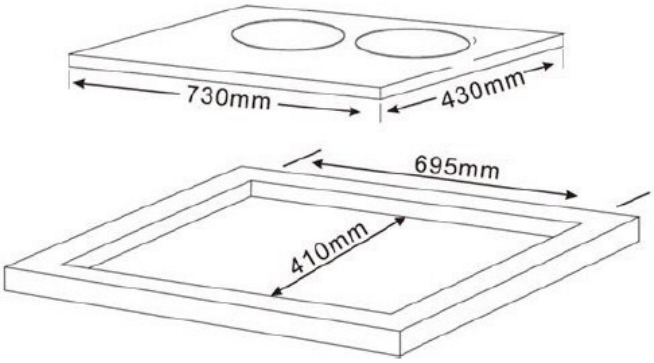

REFERENCE

REF: 112510003 EAN: 8434778001440

FEATURES

Induction hob with 2 cooking zones in 73cm
Touch control slider
Stop&Go function
Time delay function
2 cooking areas: 1 induction zone, Ø 180 mm & 1 induction zone, Ø 210 mm
Residual heating indicator
Maximum total power: 4,000W

DIMENSIONS

Product height (mm):
Product width (mm):
Product depth (mm):
Product length (mm):
Net weight (Kg): 8,2

TECHNICAL DETAILS

Power rate (V): -
Frequency (Hz): -
Maximum Nominal Power (W): -

COLOURS

112510003 Black Glass