LP2 140
Free Standing Compact Dishwasher for 6 place settings in 55cm

ECO
function

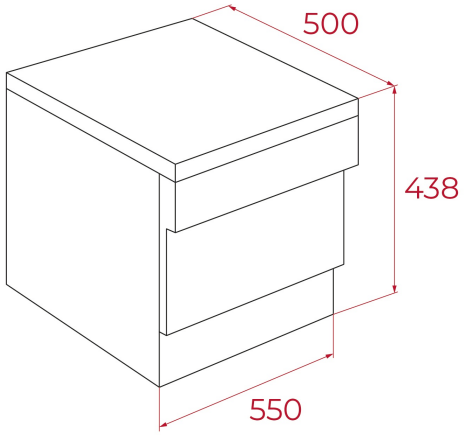

REFERENCE

REF: 40782910 EAN: 8421152144596

FEATURES

Free-standing table top dishwasher
Place settings: 6
Washing programs: 6
Washing temperatures: 40°, 45°, 50°, 60°, 65°, 70°C
Fast program 30 minutes
Eco Program
Delay timer 1-24 hours
Energy Class: A+/A
Noise level: 49 dBA

DIMENSIONS

Product height (mm): 438
Product width (mm): 550
Product depth (mm): 500
Product length (mm):
Net weight (Kg): 21

TECHNICAL DETAILS

Energy Efficiency Class: A+
Energy Consumption (Kw/day): -
Water consumption (litres/year): 1820
Noise Level (dBA): 49
Power rate (V): 220-240
Frequency (Hz): 50

COLOURS

40782910 White