HBB 615 GD

60cm Multifunction Oven and HydroClean system



HydroClean

70L capacity

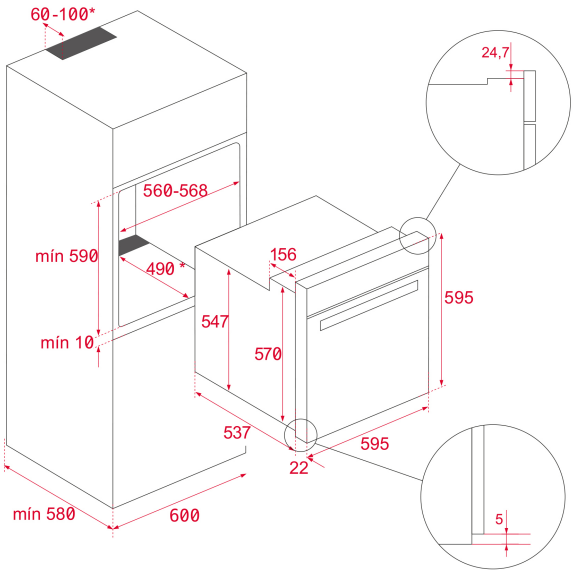

REFERENCE

REF: 41560080 **EAN:** 8421152154137

FEATURES

Multifunction oven
8 Cooking functions
HydroClean system
Mechanical control knobs
Minute minder
Chrome supports with 5 cooking levels
Double glazed door
Mechanical quick preheating
Anti-tip deep tray and anti-tip baking tray
Dynamic ventilation
Gross/net capacity: 71/70 litres

DIMENSIONS

Product height (mm): 595
Product width (mm): 595
Product depth (mm): 537+22
Product length (mm):
Net weight (Kg): 28

TECHNICAL DETAILS

Energy Efficiency Class: A
Power rate (V): 220-240
Frequency (Hz): 50/60
Maximum Nominal Power (W): 2615

COLOURS

41560080 Stainless Steel