HRB 6300 VN

Multifunction SurroundTemp A oven with plus extension telescopic guides





HydroClean | SurroundTemp, extra rear resistance for a uniform cooking | 70L capacity | Plus extension telescopic guide

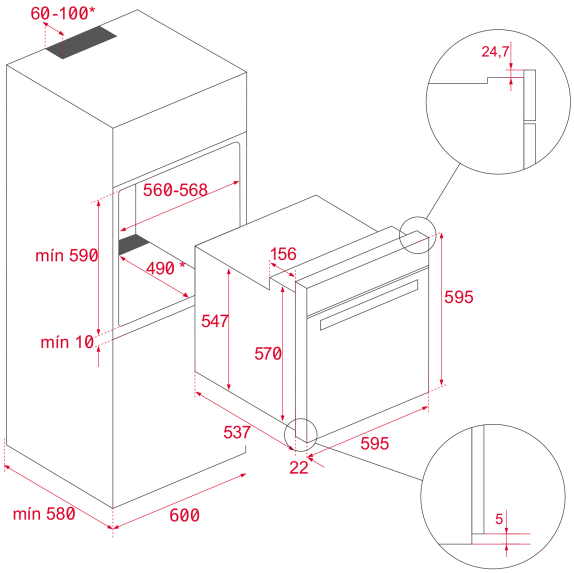

REFERENCE

REF: 111010012 **EAN:** 8434778008630

FEATURES

Country Style Edition
Multifunction SurroundTemp
9 Cooking functions
Automatic HydroClean system
Mechanical control knobs
Minute minder
Chrome supports with 5 cooking levels
1 Plus Extension telescopic guide
Double glazed door
Mechanical quick preheating
Anti-tip deep tray and anti-tip baking tray
Dynamic ventilation
Gross/net capacity: 71/70 litres

DIMENSIONS

Product height (mm): 595
Product width (mm): 595
Product depth (mm): 537+22
Product length (mm):
Net weight (Kg): 27

TECHNICAL DETAILS

Energy Efficiency Class: A
Power rate (V): 220/240
Frequency (Hz): 50/60
Maximum Nominal Power (W): 3215

COLOURS

111010012 Vanilla Brass