HBB 635
Multifunction Surroundtemp Oven With HydroClean® Pro System In 60cm

HydroClean 70L capacity

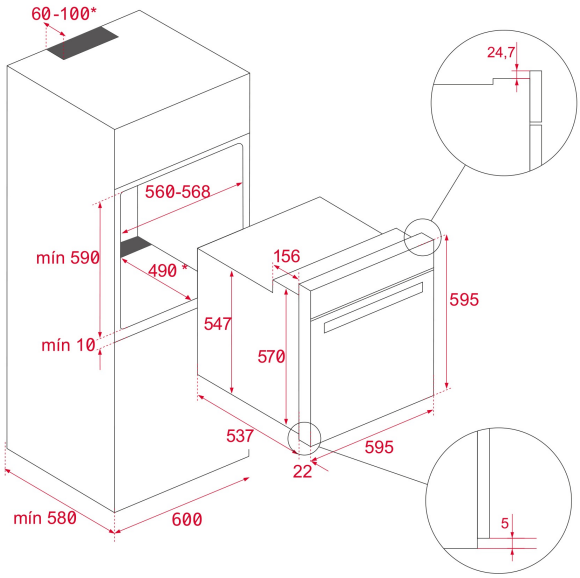

REFERENCE

REF: 111020012 EAN: 8434778002942

FEATURES

HydroClean® PRO Cleaning System
Multifuction Oven With Strip
8 Cooking Functions
Mechanical Preheating
Fingerprint PROof Stainless Steel
Capacity, Gross/Net: 71/70 Litres
Stainless Steel Fix Knobs With Black Cover
2 Glazed Door
Touch Control PROgrammer And Timer
Full Glass Inner Door
Chromed Supports
Cooling Fan
Children Safety Block Option
Deep Tray, Baking Tray And Standard Cooking Grid

DIMENSIONS

Product height (mm): 595
Product width (mm): 595
Product depth (mm): 537+22
Product length (mm):
Net weight (Kg): 27

TECHNICAL DETAILS

Energy Efficiency Class: A+
Power rate (V): 220-240
Frequency (Hz): 50/60
Maximum Nominal Power (W): 2615

COLOURS

111020012 Stainless Steel